1976 KV100-A7 PARTS DIAGRAM

CARBURETOR G4TR-E,KV100-A7 ('74-'75)

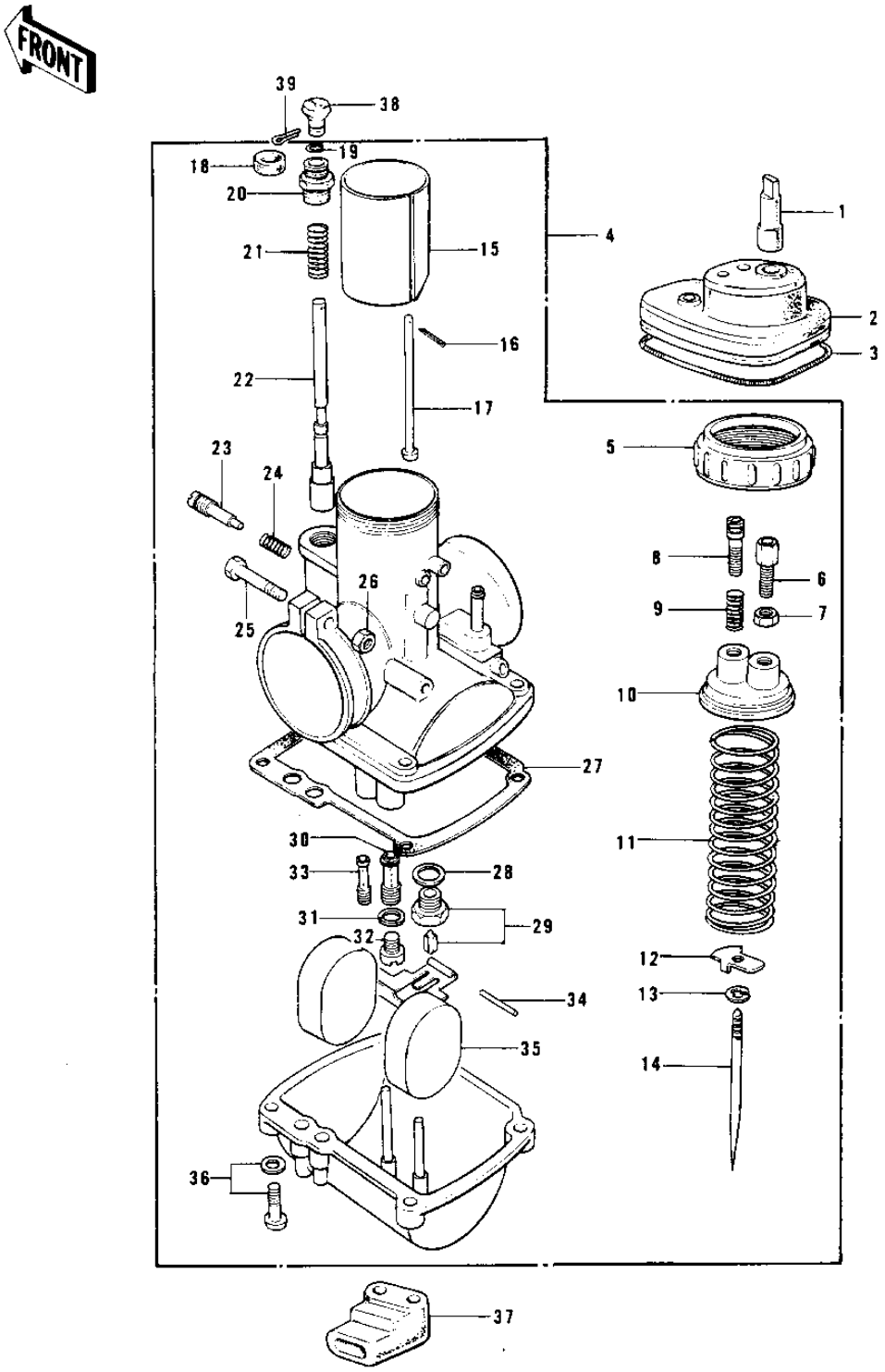

G4TR-E,KV100-A7

© 2025 Kawasaki Motors Corp., U.S.A.

1976 KV100-A7 PARTS LIST

CARBURETOR G4TR-E,KV100-A7 ('74-'75)

ITEM NAME	PART NUMBER	QUANTITY
PLUG,CARBURETOR CAP (Ref # 1)	16147-001	1
CAP,CARBURETOR (Ref # 2)	14038-035	1
SPRING COIL (Ref # 3)	92081-047	1
CARBURETOR ASSY (Ref # 4)	16001-233	1
CAP MIXING CHAMBER (Ref # 5)	16004-010	1
CABLE ADJUSTER (Ref # 6)	16002-002	1
NUT CABLE ADJUST LOCK (Ref # 7)	16003-004	1
SCREW,THROTTLE STOP (Ref # 8)	16021-002	1
SPRING THR STOP SCREW (Ref # 9)	16022-005	1
TOP MIXING CHAMBER (Ref # 10)	16005-005	1
SPRING THROTTLE VALVE (Ref # 11)	16006-013	1
SPRING SEAT,THRTL TL (Ref # 12)	16007-020	1
CIRCLIP (Ref # 13)	16008-010	1
JET NEEDLE 4EJ7 (Ref # 14)	16009-059	1
VALVE,THROTTLE CA2.0 (Ref # 15)	16025-057	1
PIN COTTER 1.2X10 (Ref # 16)	550D1210	1
ROD,THROTTLE VLV STP (Ref # 17)	16024-012	1
CAP,STARTER PLUNGER (Ref # 18)	16036-012	1
CIRCLIP (Ref # 19)	92037-1077	1
CAP STARTER PLUNGER (Ref # 20)	16012-010	1
SPRING,STARTER PLUNGR (Ref # 21)	16013-010	1
PLUNGER,STARTER (Ref # 22)	16016-012	1
SCREW PILOT AIR ADJST (Ref # 23)	16014-002	1
SPRING-THR STOP SCREW (Ref # 24)	16022-007	1
SCREW CLAMP (Ref # 25)	16010-004	1
NUT 6MM (Ref # 26)	311B0600	1
GASKET,FLOAT CHAMBER (Ref # 27)	16019-021	1
WASHER VALVE SEAT (Ref # 28)	16029-002	1
FLOAT VALVE ASSY (Ref # 29)	16030-001	1

© 2025 Kawasaki Motors Corp., U.S.A.

1976 KV100-A7 PARTS LIST

CARBURETOR G4TR-E,KV100-A7 ('74-'75)

ITEM NAME	PART NUMBER	QUANTITY
NEEDLE JET O-4 (Ref # 30)	16017-081	1
WASHER MAIN JET (Ref # 31)	16034-001	1
PILOT JET #17.5 ISO (Ref # 33)	92064-020	1
FLOAT PIN (Ref # 34)	16032-003	1
FLOAT (Ref # 35)	16031-015	1
SCREW-FLOAT CHAMBER (Ref # 36)	16033-012	4
GROMMET,OVER FLOW (Ref # 37)	16136-007	1
KNOB,CARBURETOR (Ref # 38)	92077-022	1
PIN COTTER 1.6X15 (Ref # 39)	550D1615	1

© 2025 Kawasaki Motors Corp., U.S.A.