1976 KV100-A7 PARTS DIAGRAM

ENGINE COVERS 1/2 ('74-'75)

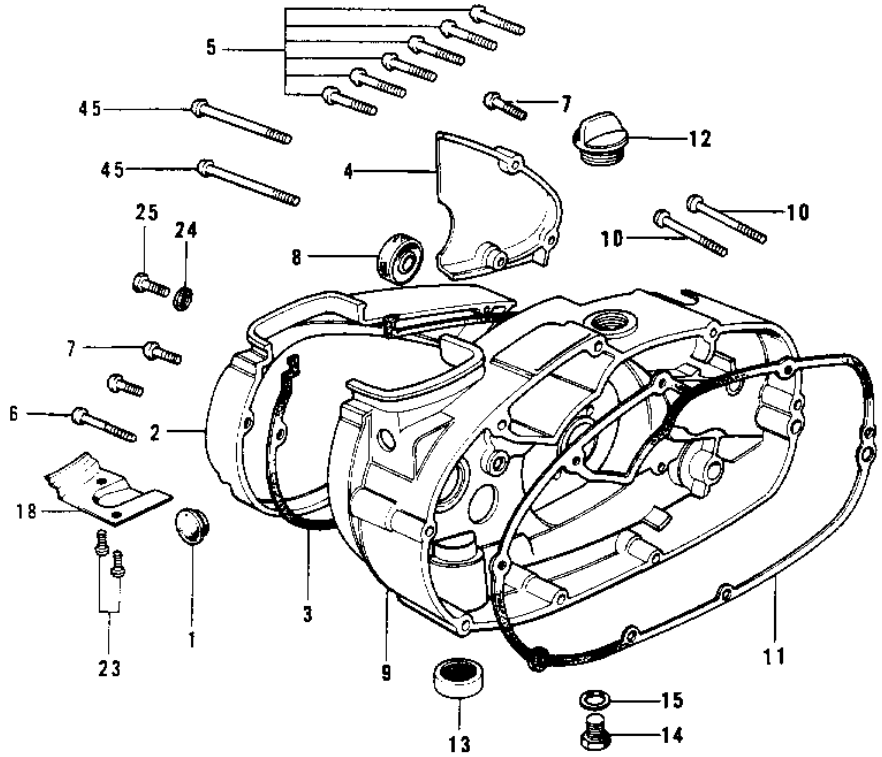

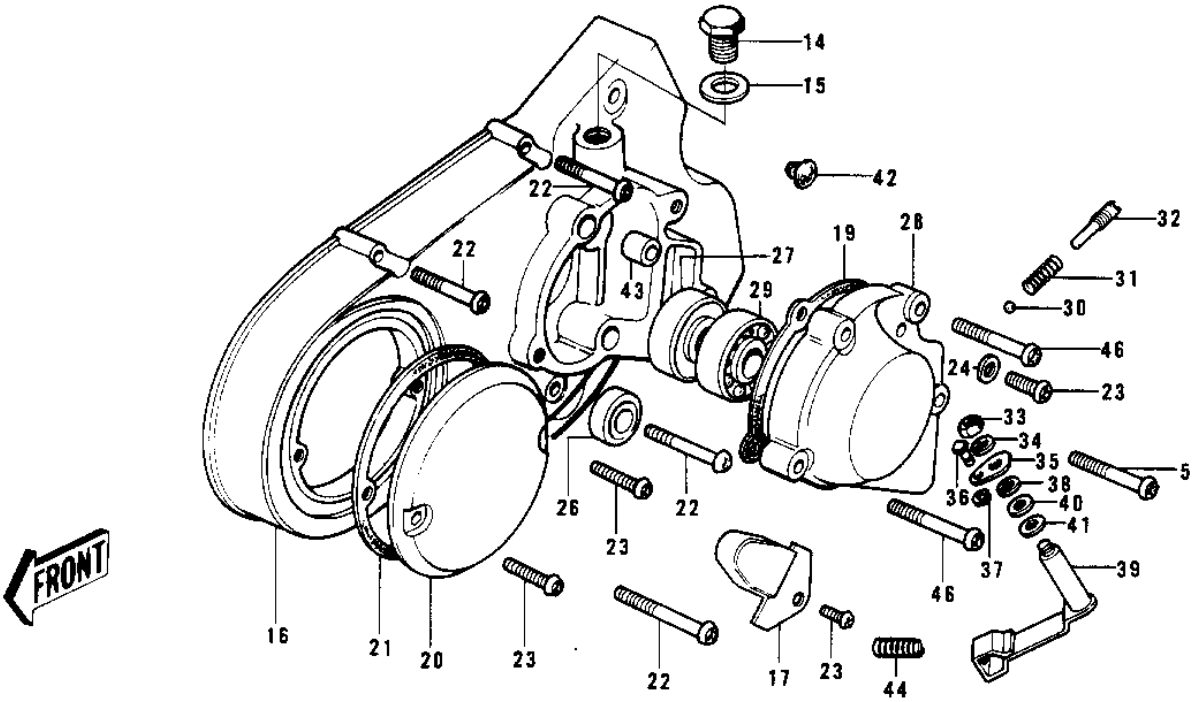

© 2025 Kawasaki Motors Corp., U.S.A.

1976 KV100-A7 PARTS LIST

ENGINE COVERS 1/2 ('74-'75)

ITEM NAME	PART NUMBER	QUANTITY
CAP CARB MOUNT HOLE (Ref # 1)	14039-001	1
COVER,CARB BARREL (Ref # 2)	14030-1005	1
COVER,CARB BARREL (Ref # 2)	14030-1005	1
GASKET,CARBURETOR COV (Ref # 3)	11060-1201	1
COVER,OIL PUMP,BUFF (Ref # 4)	14030-050-80	1
SCREW PAN HEAD 6X30 (Ref # 5)	220B0630	8
SCREW PAN HEAD 6X35 (Ref # 6)	220B0635	1
SCREW PAN HEAD 6X20 (Ref # 7)	220B0620	3
OIL SEAL TB14257 (Ref # 8)	653B142507	1
COVER,R.H,ENG,BARREL (Ref # 9)	14032-1017	1
COVER,R.H,ENG,BARREL (Ref # 9)	14032-1017	1
SCREW PAN HEAD 6X45 (Ref # 10)	220B0645	2
GASKET,CLUTCH COVER (Ref # 11)	11060-1198	1
FILLER,OIL (Ref # 12)	16115-018	1
DRAIN,FUEL (Ref # 13)	16116-006	1
PLUG OIL DRAIN (Ref # 14)	92067-001	2
GASKET CHECK VALVE (Ref # 15)	92065-058	2
COVER,L.H ENGINE,BUFF (Ref # 16)	14031-063-80	1
CAP-L.H.ENGINE COVER (Ref # 17)	14036-004	1
COVER,CLUTCH CABLE (Ref # 18)	14025-1137	1
COVER,CLUTCH CABLE (Ref # 18)	14025-1137	1
GASKET-LH ENG COV CAP (Ref # 19)	14051-002	1
COVER-BRK POINT,CR (Ref # 20)	14027-007-79	1
GASKET BREAKER COVER (Ref # 21)	14050-002	1
SCREW PAN HEAD 6X65 (Ref # 22)	220B0665	6
SCREW PAN HEAD 6X12 (Ref # 23)	220B0612	6
WASHER OIL PUMP BANJO (Ref # 24)	92022-077	2
BOLT,HEX HEAD,6X14 (Ref # 25)	92001-121	1
SEAL-OIL (Ref # 26)	92049-1249	1

© 2025 Kawasaki Motors Corp., U.S.A.

1976 KV100-A7 PARTS LIST

ENGINE COVERS 1/2 ('74-'75)

ITEM NAME	PART NUMBER	QUANTITY
OIL SEAL SC38556 (Ref # 27)	92050-012	1
CAP ASSY,ENG COV,BUFF (Ref # 28)	14075-1001	1
CAP ASSY,ENG COV,BUFF (Ref # 28)	14075-1001	1
BEARING BALL #6005 (Ref # 29)	601B6005	1
BALL STEEL 1/4' (Ref # 30)	600A0800	1
SPRING (Ref # 31)	92081-075	1
PLUG L.H ENG COV CAP (Ref # 32)	92066-015	1
NUT 6MM (Ref # 33)	312B0600	1
WASHER SPRING 6MM (Ref # 34)	461F0600	1
LEVER A (Ref # 35)	13204-002	1
RETAINER SHIFT ROD (Ref # 36)	13197-001	1
CIRCLIP SELD BEM FIT (Ref # 37)	482K4000	1
WASHER WAVE (Ref # 38)	13211-001	1
SHAFT ASY-SHIFT LEVER (Ref # 39)	13234-002	1
OIL SEAL,VC8144 (Ref # 40)	92054-015	1
WASHER PLAIN 8MM (Ref # 41)	410B0800	1
PLUG,RUBBER (Ref # 42)	92074-019	1
PIN,DOWEL,10X8.2X14 (Ref # 43)	92043-1037	2
SPRING-CHANGE CABLE (Ref # 44)	92081-099	1
SCREW PAN HEAD 6X75 (Ref # 45)	220B0675	2
SCREW PAN HEAD 6X40 (Ref # 46)	220B0640	2

© 2025 Kawasaki Motors Corp., U.S.A.