1976 KV100-A7 PARTS DIAGRAM

CRANKCASE ('74-'75)

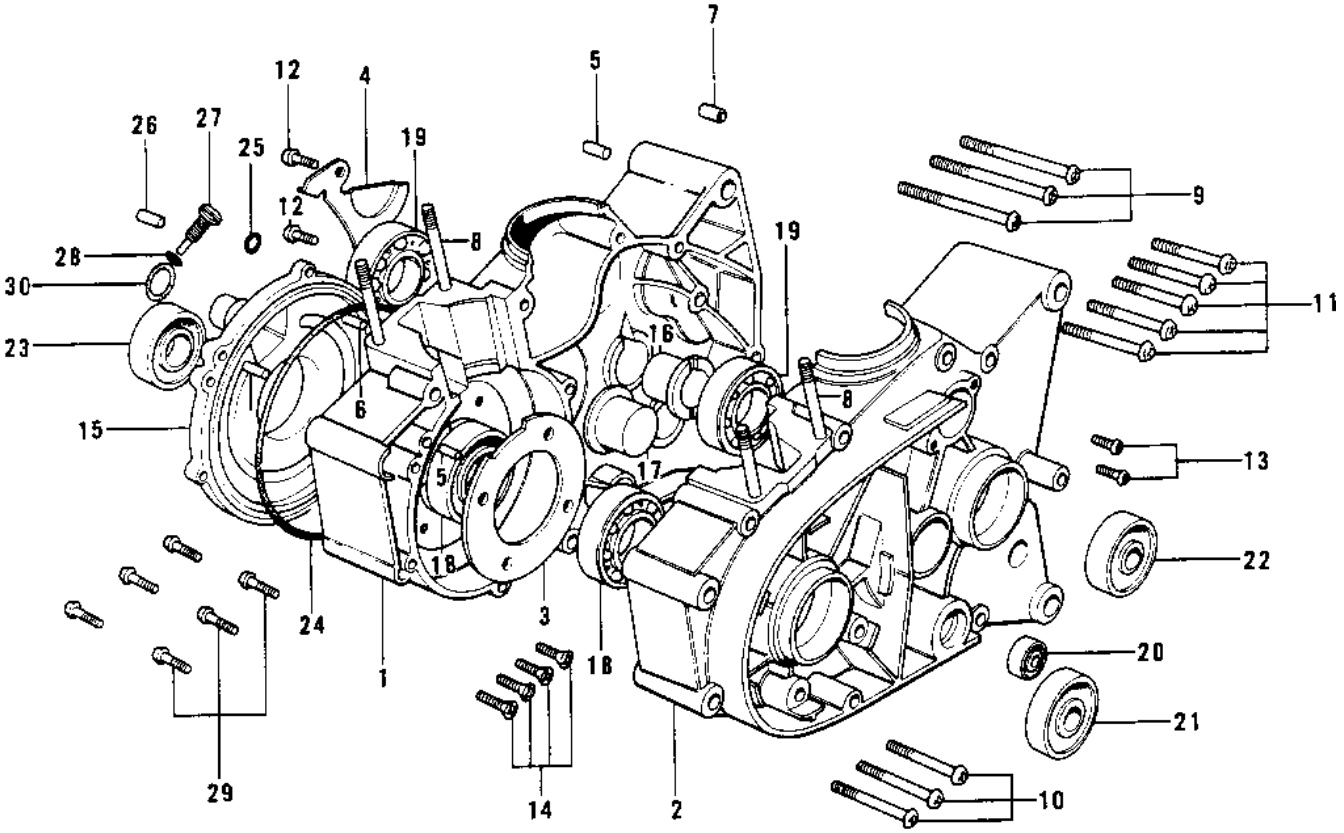

© 2025 Kawasaki Motors Corp., U.S.A.

1976 KV100-A7 PARTS LIST

CRANKCASE ('74-'75)

ITEM NAME	PART NUMBER	QUANTITY
CRANKCASE,R.H F.BLACK (Ref # 1)	14003-063-21	1
CRANKCASE,L.H F.BLK (Ref # 2)	14002-098-21	1
HOLDER CRANKSHAFT BRG (Ref # 3)	14014-017	1
HOLDER BEARING MSSON (Ref # 4)	14014-008	1
PIN DOWEL 8X16 (Ref # 5)	551A0816	3
PIN DOWEL 5X12 (Ref # 6)	610A0512	2
PIN,DOWEL,10X8.2X14 (Ref # 7)	92043-1037	2
STUD 8X115 (Ref # 8)	172G08115	4
SCREW PAN HEAD 6X65 (Ref # 9)	220B0665	3
SCREW PAN HEAD 6X60 (Ref # 10)	220B0660	3
SCREW PAN HEAD 6X40 (Ref # 11)	220B0640	5
SCREW PAN HEAD 6X25 (Ref # 12)	220B0625	2
SCREW PAN HEAD 6X12 (Ref # 13)	220B0612	2
SCREW CNTSNK HD 6X16 (Ref # 14)	221B0616	4
COVER ROTARY DISC VLV (Ref # 15)	14019-032	1
BUSH DRIVE SHAFT (Ref # 16)	92028-069	1
BUSH OUTPUT SHAFT (Ref # 17)	92028-025	1
BEARING BALL #6204 (Ref # 18)	601B6204	2
BEARING BALL #6005 (Ref # 19)	601B6005	2
OIL SEAL SB12205 (Ref # 20)	92049-004	1
SEAL-OIL (Ref # 21)	92049-1240	1
OIL SEAL SC32435.5 (Ref # 22)	92050-032	1
SEAL-OIL (Ref # 23)	92049-1250	1
"0" RING,100MM (Ref # 24)	92055-010	1
"0" RING,8MM (Ref # 25)	92055-029	1
PIN DOWEL 8X16 (Ref # 26)	92042-017	1
NOZZLE OIL INJECTION (Ref # 27)	92062-004	1
"0" RING,5MM (Ref # 28)	92055-011	1
SCREW PAN HEAD 6X20 (Ref # 29)	220B0620	6

© 2025 Kawasaki Motors Corp., U.S.A.

1976 KV100-A7 PARTS LIST

CRANKCASE ('74-'75)

ITEM NAME	PART NUMBER	QUANTITY
"0" RING,26MM (Ref # 30)	670B3026	1

© 2025 Kawasaki Motors Corp., U.S.A.