1969 G3SS PARTS DIAGRAM

TURN SIGNALS ('74-'75)

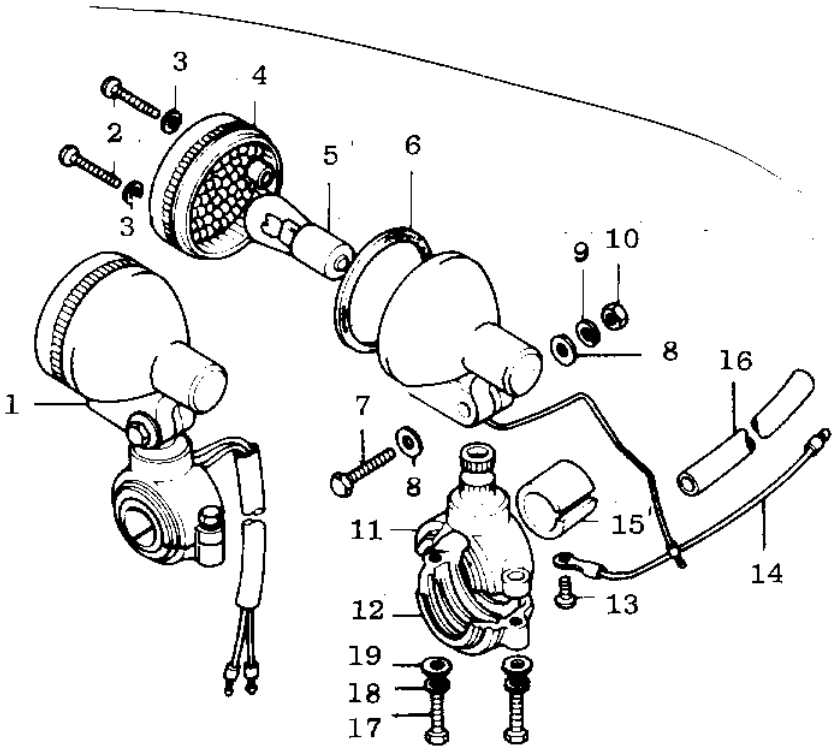

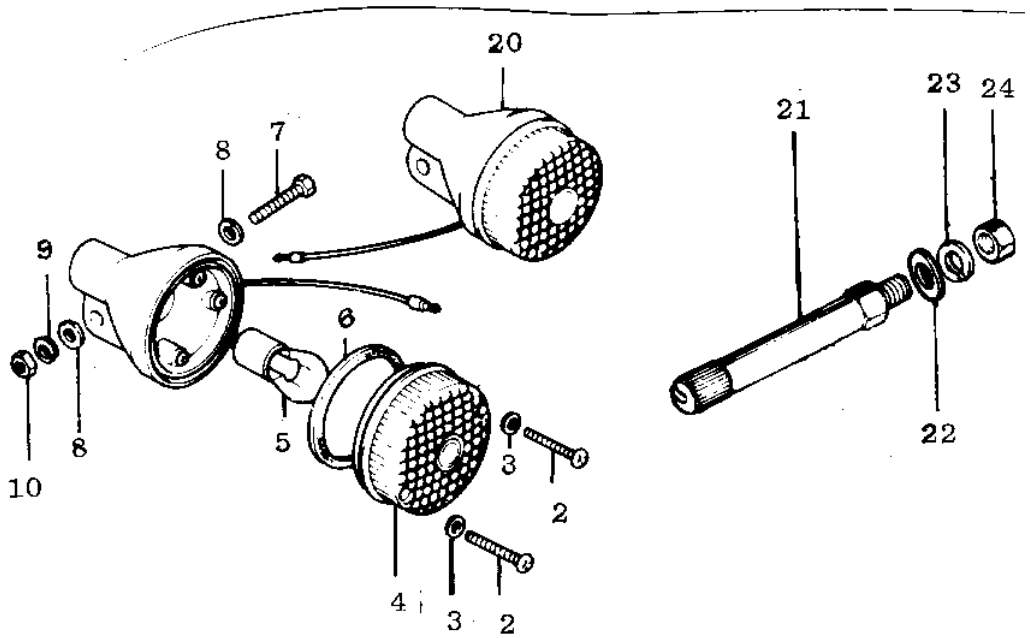

© 2024 Kawasaki Motors Corp., U.S.A.

1969 G3SS PARTS LIST

TURN SIGNALS ('74-'75)

ITEM NAME	PART NUMBER	QUANTITY

© 2024 Kawasaki Motors Corp., U.S.A.