1972 G3SS-B PARTS DIAGRAM

SIDE COVERS/OIL TANK ('74-'75)

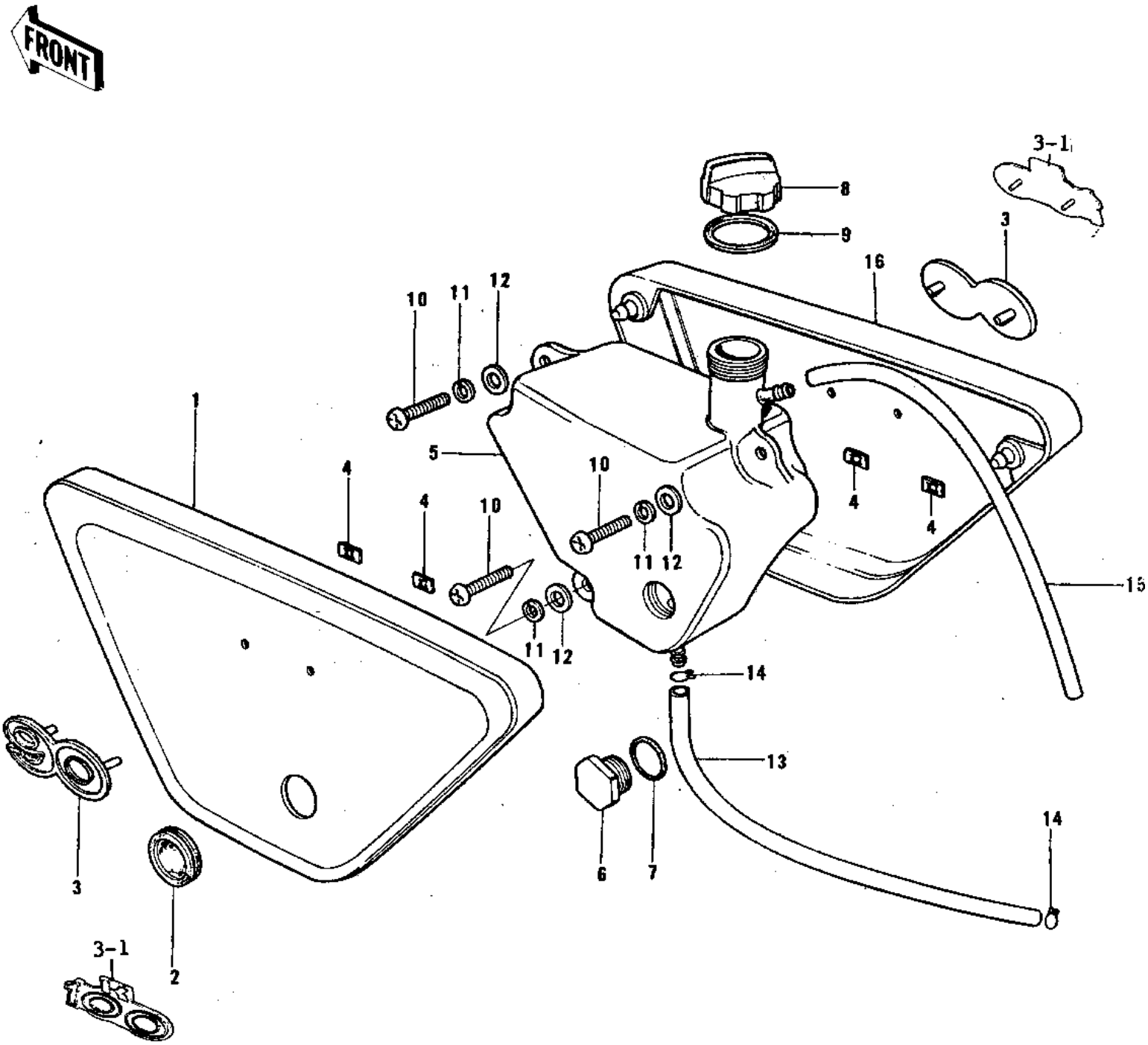

© 2024 Kawasaki Motors Corp., U.S.A.

1972 G3SS-B PARTS LIST

SIDE COVERS/OIL TANK ('74-'75)

ITEM NAME	PART NUMBER	QUANTITY
COVER,L.H SIDE,C.LIME (Ref # 1)	36001-045-1Y	1
COVER,L.H. SIDE,H.RED (Ref # 1)	36001-045-2K	1
GROMMET-R.H SIDE COV (Ref # 2)	92071-065	1
EMBLEM,SIDE COVER (Ref # 3)	56018-162	2
EMBLEM,SIDE COVER (Ref # 3-1)	56018-178	2
NUT,LOCK,3MM (Ref # 4)	92018-005	4
TANK,OIL (Ref # 5)	52001-042	1
GUAGE-OIL LEVEL (Ref # 6)	52015-002	1
"O" RING,20MM (Ref # 7)	92055-051	1
CAP-OIL TANK (Ref # 8)	52003-019	1
GASKET-OIL TANK CAP (Ref # 9)	92065-085	1
SCREW PAN HEAD 6X18 (Ref # 10)	220B0618	3
WASHER SPRING 6MM (Ref # 11)	461F0600	3
WASHER PLAIN 6MM (Ref # 12)	410B0600	2
PIPE-OIL (Ref # 13)	92059-072	1
CLAMP FUEL PIPE (Ref # 14)	92037-010	2
TUBE-PVC,5X1000 (Ref # 15)	700Q051000	1
COVER,R.H SIDE,LIME (Ref # 16)	36007-038-1Q	1
COVER,RH SIDE,H.RED (Ref # 16)	36007-038-2K	1

© 2024 Kawasaki Motors Corp., U.S.A.