1972 G3SS-B PARTS DIAGRAM

FRONT HUB/BRAKE ('74-'75)

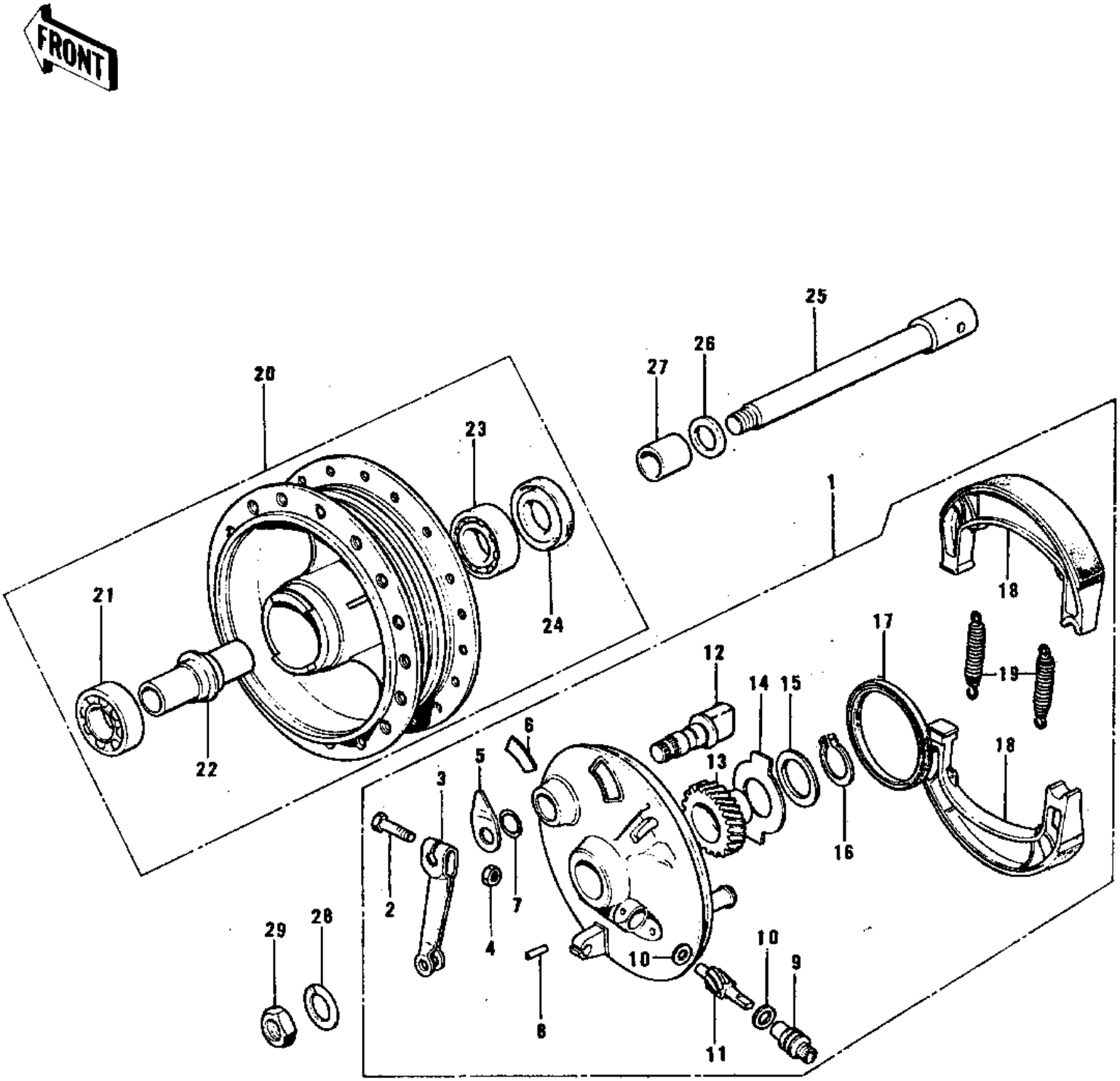

© 2024 Kawasaki Motors Corp., U.S.A.

1972 G3SS-B PARTS LIST

FRONT HUB/BRAKE ('74-'75)

ITEM NAME	PART NUMBER	QUANTITY
PANEL-ASY,FR BRK (Ref # 1)	41035-083-80	1
BOLT-UPSET (Ref # 2)	112G0630	1
BOLT-UPSET (Ref # 2)	112G0630	AL
LEVER FRONT BRAKE CAM (Ref # 3)	41053-005	1
NUT,6MM (Ref # 4)	41072-007	1
INDICATOR,BK SHOE (Ref # 5)	41085-008	1
LABEL,FR BRK SHOE (Ref # 6)	41084-002	1
"0" RING,11MM (Ref # 7)	92055-004	1
PIN,SPRING (Ref # 8)	41082-001	1
BUSH,SPEEDMETER CABLE (Ref # 9)	41062-005	1
WASHER THRST SPD PINI (Ref # 10)	41063-001	2
PINION SPEEDOMETER (Ref # 11)	41060-004	1
CAM SHAFT-FRONT BRAKE (Ref # 12)	41050-018	1
GEAR SPEEDOMETER (Ref # 13)	41059-005	1
RECIEVER SPEED GEAR (Ref # 14)	41064-002	1
WASHER SPEED GR THRST (Ref # 15)	41065-002	1
CIRCLIP 15MM (Ref # 16)	480J1500	1
OIL SEAL BRAKE PANEL (Ref # 17)	92050-002	1
SHOE-BRAKE (Ref # 18)	41048-1085	2
SPRING,BRAKE SHOE (Ref # 19)	92081-1766	2
DRUM-ASSY,FR BRK (Ref # 20)	41034-1040	1
BEARING BALL #6300Z (Ref # 21)	601B6300Z	1
SPACER FRONT HUB (Ref # 22)	41039-002	1
BEARING BALL #6200 (Ref # 23)	601B6200	1
OIL SEAL FRONT DRUM (Ref # 24)	92050-003	1
AXLE-FRONT (Ref # 25)	41068-039	1
DUST SHIELD FRNT DRUM (Ref # 26)	41042-002	1
COLLAR FRONT HUB R.H (Ref # 27)	41069-002	1
WASHER SPRING 10MM (Ref # 28)	461F1000	1

© 2024 Kawasaki Motors Corp., U.S.A.