1974 G3SS-D PARTS DIAGRAM

FRAME/FRAME FITTINGS ('74-'75)

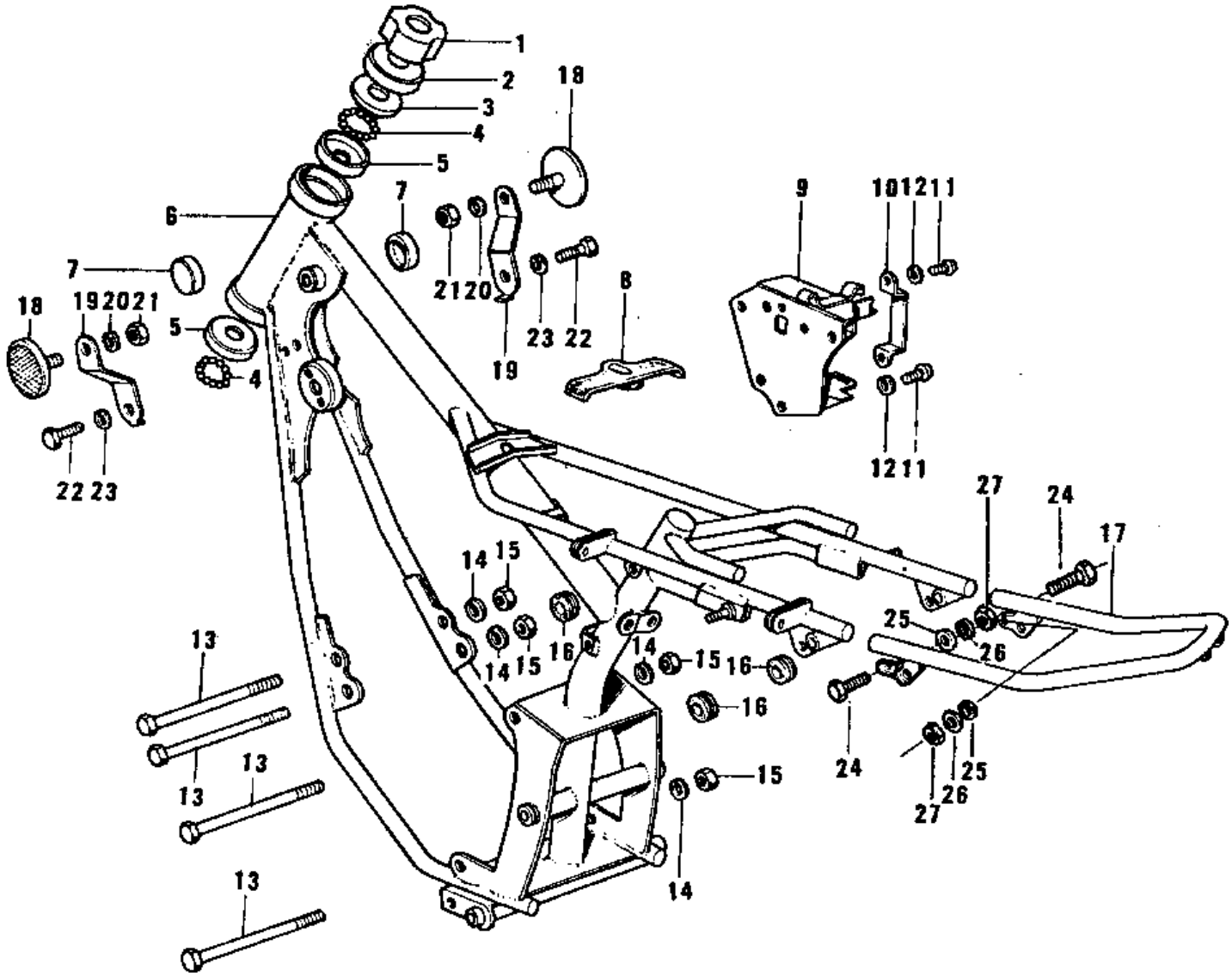

© 2024 Kawasaki Motors Corp., U.S.A.

1974 G3SS-D PARTS LIST

FRAME/FRAME FITTINGS ('74-'75)

ITEM NAME	PART NUMBER	QUANTITY
NUT STEERING STEM LCK (Ref # 1)	92090-006	1
CAP STEERING STEM (Ref # 2)	46098-004	1
CONE,STRG STM BRG,UP (Ref # 3)	92047-014	1
BALL STEEL 3/16' (Ref # 4)	600A0600	46
RACE,STRG STM BEARING (Ref # 5)	92048-009	2
FRAME (Ref # 6)	32002-064	1
FRAME (Ref # 6)	32002-106	1
DAMPER RUBBER-FL TANK (Ref # 7)	92075-101	2
DAMPER RUBBER,FL TNK (Ref # 8)	92075-226	1
CASE,BATTERY (Ref # 9)	32097-032	1
BAND BATTERY (Ref # 10)	32100-002	1
SCREW PAN HEAD 6X12 (Ref # 11)	220B0612	4
WASHER SPRING 6MM (Ref # 12)	461F0600	4
BOLT,FLANGED,10X115 (Ref # 13)	92001-1603	4
WASHER SPRING 10MM (Ref # 14)	461F1000	4
NUT,10MM (Ref # 15)	314B1000	4
GROMMET (Ref # 16)	92071-056	6
STAY,REAR FENDER (Ref # 17)	35032-027	1
REFLECTOR-REFLEX (Ref # 18)	28012-011	2
BRACKET,REFLEX REFLCT (Ref # 19)	28013-007	2
WASHER SPRING 5MM (Ref # 20)	461F0500	2
NUT,5MM (Ref # 21)	311B0500	2
BOLT-UPSET,6X12 (Ref # 22)	112G0612	2
BOLT-UPSET,6X12 (Ref # 22)	112G0612	AL
WASHER SPRING 6MM (Ref # 23)	461F0600	2
BOLT (Ref # 24)	92150-1488	2
WASHER PLAIN 8MM (Ref # 25)	411B0800	2
WASHER SPRING 8MM (Ref # 26)	461F0800	2
NUT,8MM (Ref # 27)	311B0800	2

© 2024 Kawasaki Motors Corp., U.S.A.