1973 G3SS-C PARTS DIAGRAM

ENGINE COVERS (G3SS-C) ('69-'73)

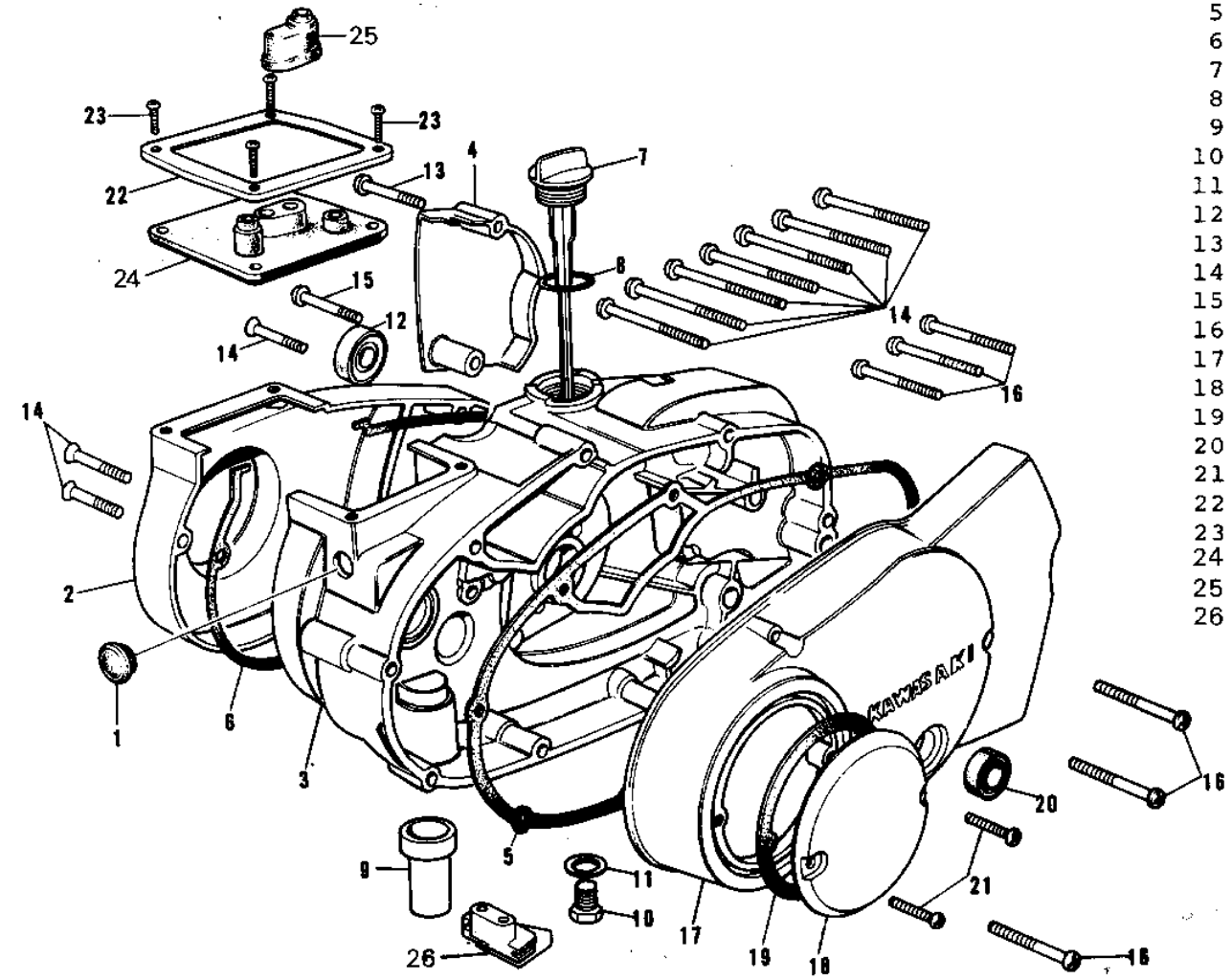

Ref.No.

1
2
3
4
5
6
7
8
9
10
11
12
13
14
15
16
17
18
19
20
21
22
23
24
25
26

© 2024 Kawasaki Motors Corp., U.S.A.

1973 G3SS-C PARTS LIST

ENGINE COVERS (G3SS-C) ('69-'73)

ITEM NAME	PART NUMBER	QUANTITY
CAP CARB MOUNT HOLE (Ref # 1)	14039-001	1
COVER-CARB,L.SILVER (Ref # 2)	14030-037-75	1
COVER-R.H ENG,SILVER (Ref # 3)	14032-072-75	1
COVER-OIL PUMP SILVER (Ref # 4)	14030-006-75	1
GASKET,CLUTCH COVER (Ref # 5)	11060-1198	1
GASKET CARB COVER (Ref # 6)	14048-001	1
FILLER,OIL (Ref # 7)	16115-018	1
"0" RING,OIL FIL PLUG (Ref # 8)	92055-026	1
DRAIN FUEL (Ref # 9)	16116-002	1
PLUG OIL DRAIN (Ref # 10)	92067-001	1
GASKET CHECK VALVE (Ref # 11)	92065-058	1
OIL SEAL TB14257 (Ref # 12)	653B142507	1
SCREW PAN HEAD 6X25 (Ref # 13)	220B0625	1
SCREW PAN HEAD 6X30 (Ref # 14)	220B0630	10
SCREW PAN HEAD 6X35 (Ref # 15)	220B0635	1
SCREW PAN HEAD 6X45 (Ref # 16)	220B0645	6
COVER-L.H ENG,SILVER (Ref # 17)	14031-040-75	1
COVER-BRK POINT,CR (Ref # 18)	14027-007-79	1
GASKET BREAKER COVER (Ref # 19)	14050-002	1
SEAL-OIL (Ref # 20)	92049-1249	1
SCREW PAN HEAD 6X12 (Ref # 21)	220B0612	2
HOLDER-CARBURETOR CAP (Ref # 22)	14065-004	1
SCREW PAN HEAD 5X10 (Ref # 23)	220B0510	4
CAP-CARBURETOR (Ref # 24)	14038-032	1
GROMMET CARB CAP (Ref # 25)	14038-006	1
GROMMET OVERFLOW PIPE (Ref # 26)	16136-001	1

© 2024 Kawasaki Motors Corp., U.S.A.