# 1975 MC1M-A PARTS DIAGRAM

## CHASSIS ELECTRICAL EQUIPMENT

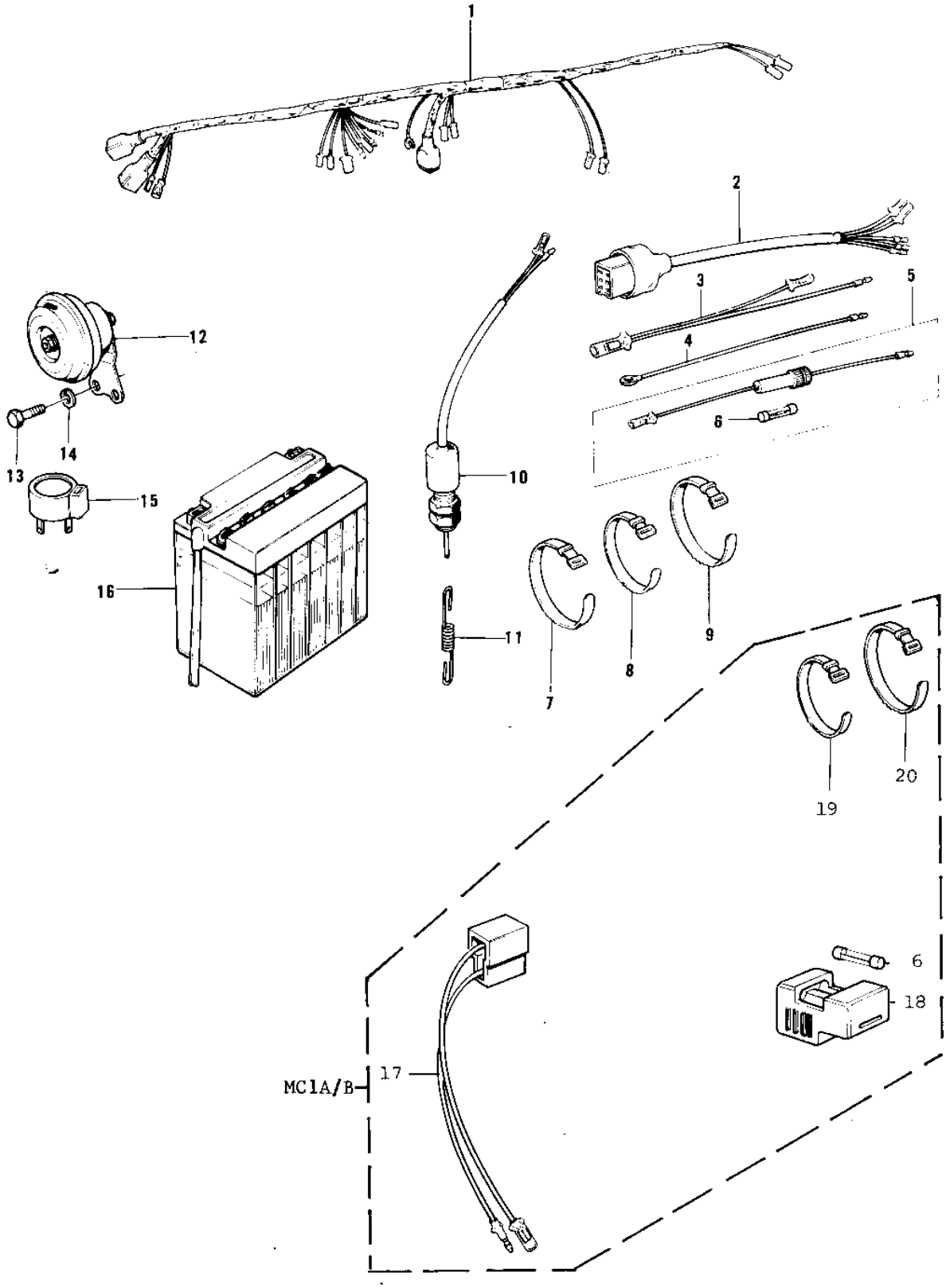


© 2024 Kawasaki Motors Corp., U.S.A.

# 1975 MC1M-A PARTS LIST

## CHASSIS ELECTRICAL EQUIPMENT

| ITEM NAME | PART NUMBER | QUANTITY |
|---|---|---|
| WIRING HARNESS,MAIN (Ref # 1) | 26001-098 | |
| WIRE,LEAD (Ref # 2) | 26011-1042 | |
| LEAD WIRE (Ref # 3) | 26011-042 | |
| LEAD WIRE,SIGNAL LAMP (Ref # 4) | 26011-063 | |
| FUES ASSY (Ref # 5) | 26004-008 | |
| FUSE ASSY (Ref # 5) | 26004-017 | |
| FUSE 10A (Ref # 6) | 26006-003 | |
| BAND,WIRING HARNESS (Ref # 7) | 92072-056 | |
| BAND,MIDDLE (Ref # 8) | 92072-031 | |
| BAND,LONG (Ref # 9) | 92072-032 | |
| SWITCH-BRAKE LAMP (Ref # 10) | 27010-015 | |
| SPRING-BRAKE LAMP SW (Ref # 11) | 27011-011 | |
| HORN (Ref # 12) | 27003-060 | |
| HORN (Ref # 12) | 27003-060 | |
| BOLT,6X10 (Ref # 13) | 112G0610 | |
| BOLT,6X10 (Ref # 13) | 112G0610 | |
| WASHER SPRING 6MM (Ref # 14) | 461F0600 | |
| RELAY-TURN SIGNAL (Ref # 15) | 27002-013 | |
| UNAVAILABLE IN PRICE BOOK (Ref # 16) | 26012-029 | |
| YUA BAT 6N4-2A-5 (Ref # 16) | K26012-020 | |
| WIRE,RECTIFIER LEAD (Ref # 17) | 26011-074 | |
| HOLDER,SPARE FUSE (Ref # 18) | 26016-003 | |
| BAND,SHORT (Ref # 19) | 92072-030 | |
| BAND,WIRING HARNESS (Ref # 20) | 92072-056 | |

© 2024 Kawasaki Motors Corp., U.S.A.