1989 JS550 PARTS DIAGRAM

CRANKCASE

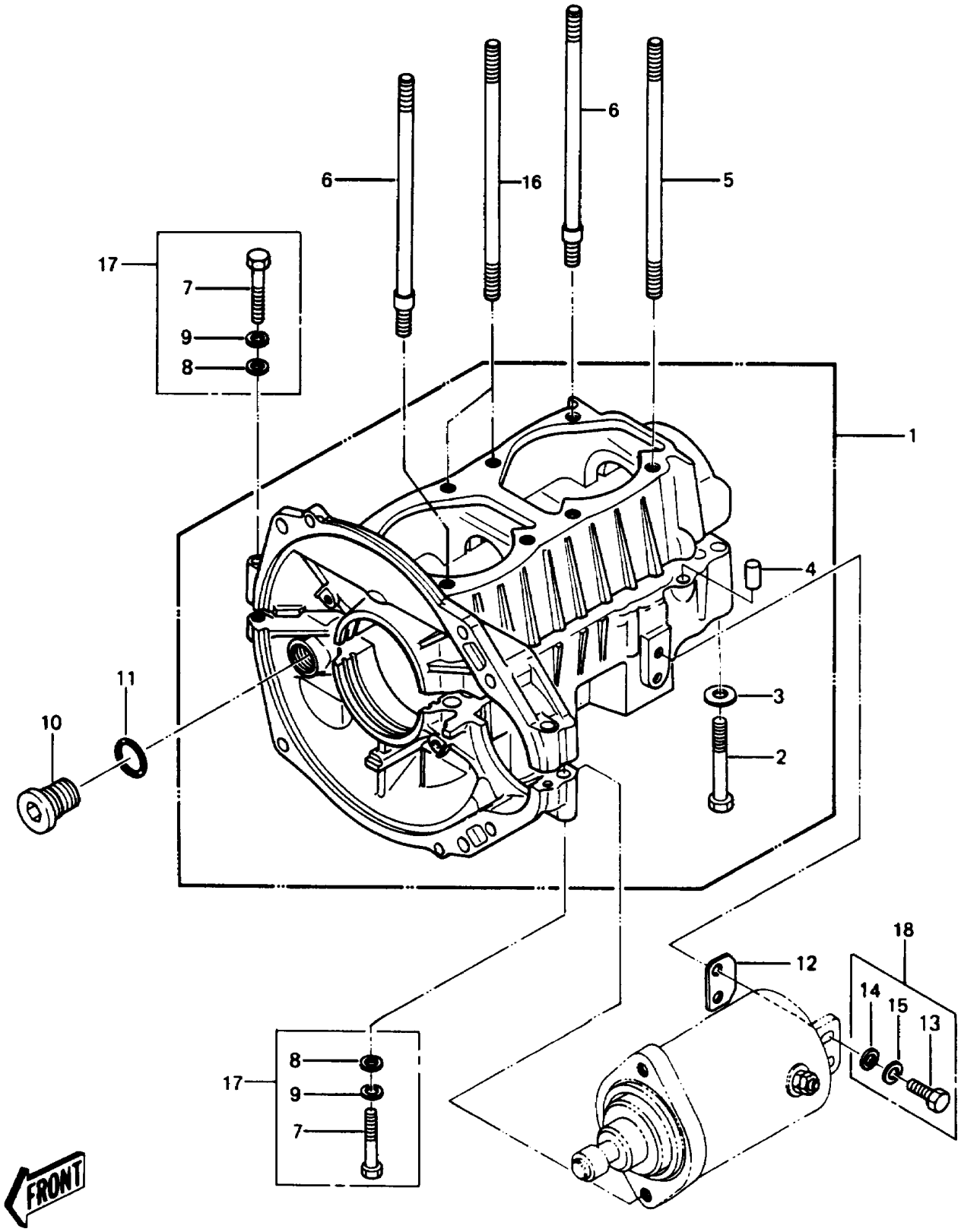

© 2024 Kawasaki Motors Corp., U.S.A.

1989 JS550 PARTS LIST

CRANKCASE

ITEM NAME	PART NUMBER	QUANTITY
JOINT (Ref # 10)	59071-516	1
O RING,16MM (Ref # 11)	670B2016	1
SHIM,STARTER,T=0.6 (Ref # 12A)	92025-3013	AR
SHIM,STARTER,T=0.8 (Ref # 12B)	92025-3014	AR
SHIM,STARTER,T=0.4 (Ref # 12)	92025-3012	AR
STUD,8X170 (Ref # 16)	92004-2084	2
BOLT-WP (Ref # 17)	156R0640	3
BOLT,6X20 (Ref # 18)	92002-3755	2
SET-CRANKCASE (Ref # 1A)	14001-5265	1
BOLT,8X65 (Ref # 2A)	92150-3708	10
PIN,DOWEL,6.3X8X14 (Ref # 4)	92042-007	2
STUD,8X167 (Ref # 5)	92004-507	4
STUD,8X167 (Ref # 6)	92004-3020	2

© 2024 Kawasaki Motors Corp., U.S.A.