1992 JS440 PARTS DIAGRAM

Cable

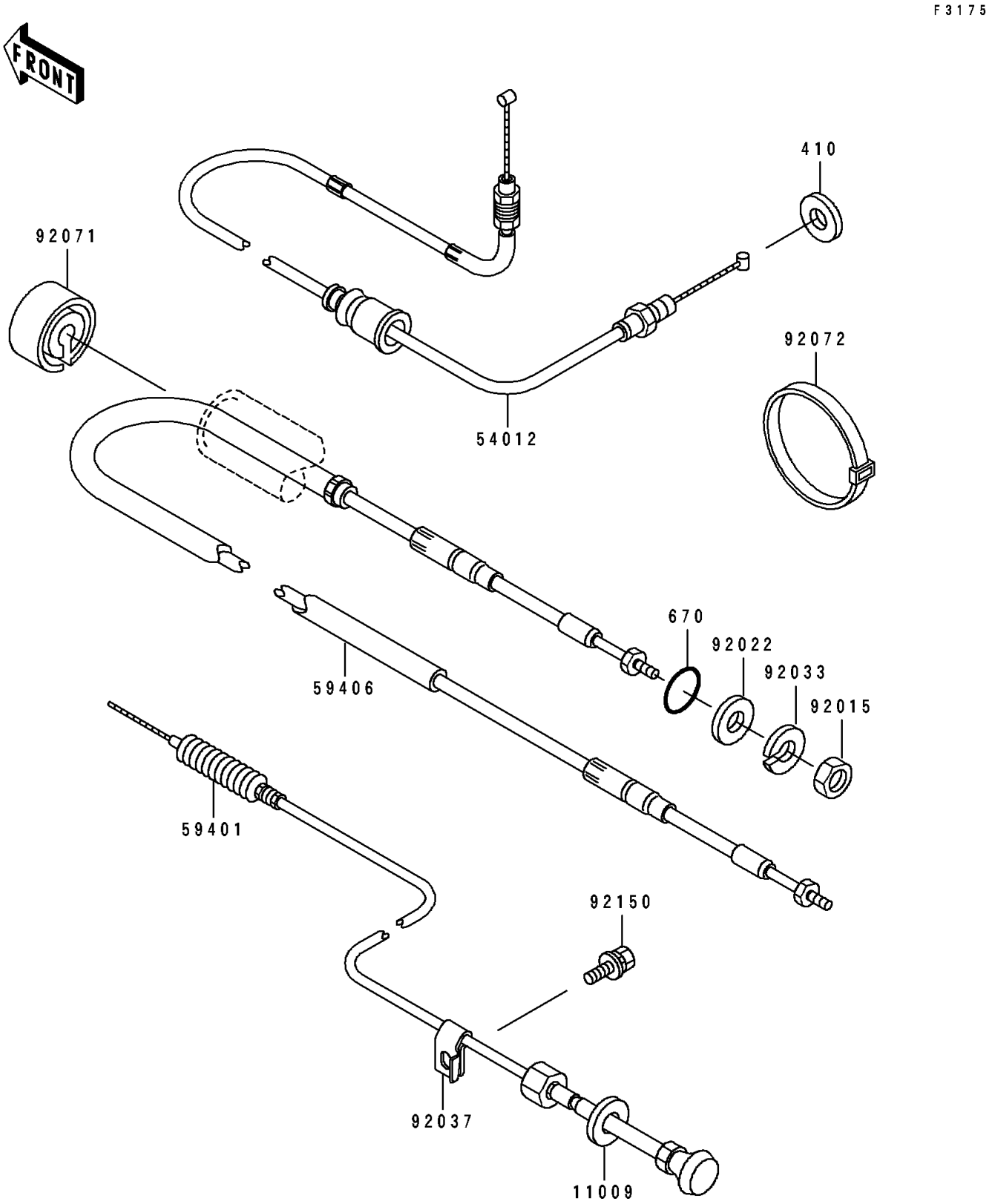

© 2024 Kawasaki Motors Corp., U.S.A.

1992 JS440 PARTS LIST

Cable

ITEM NAME	PART NUMBER	QUANTITY
GASKET (Ref # 11009)	92065-538	1
CABLE-THROTTLE (Ref # 54012)	54012-3726	1
CABLE-CHOKE (Ref # 59401)	59401-3704	1
CABLE-STRG (Ref # 59406)	59406-3709	1
NUT,20MM (Ref # 92015)	92015-526	1
WASHER (Ref # 92022)	92022-535	1
RING-SNAP (Ref # 92033)	92036-501	1
CLAMP,CHOKE CABLE (Ref # 92037)	92037-544	1
GROMMET (Ref # 92071)	92071-3774	1
BAND,L=123 (Ref # 92072)	92072-030	2
BOLT,6X12 (Ref # 92150)	92150-3709	1
W-PLAIN-S,10MM (Ref # 410)	410S1000	1
O RING,11MM (Ref # 670)	670B2011	1

© 2024 Kawasaki Motors Corp., U.S.A.