1990 300 SX PARTS DIAGRAM

Engine Cover(s)

(E1431)

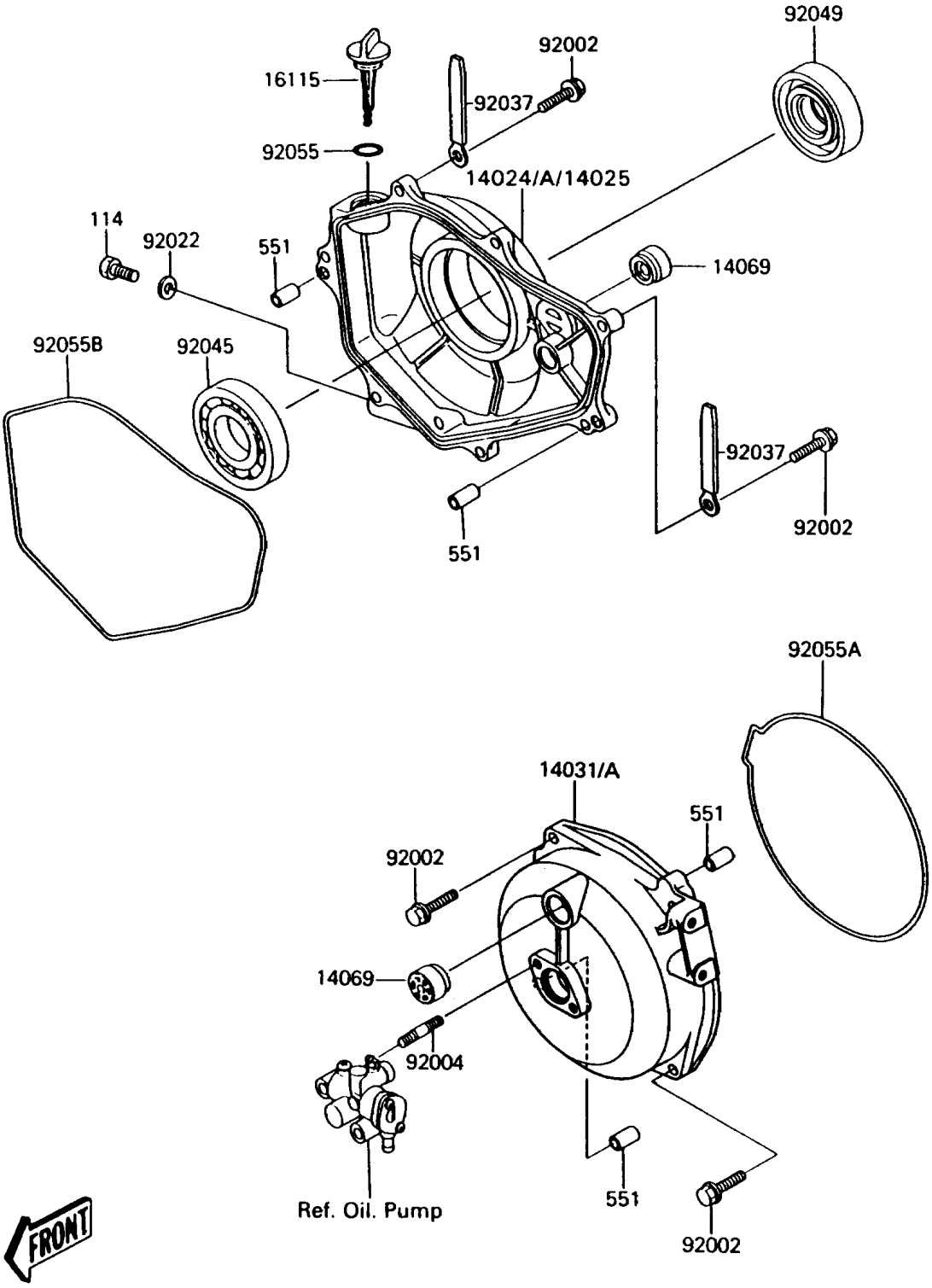

© 2024 Kawasaki Motors Corp., U.S.A.

1990 300 SX PARTS LIST

Engine Cover(s)

ITEM NAME	PART NUMBER	QUANTITY
COVER,CLUTCH ONEWAY (Ref # 14024)	14024-3733	1
COVER-GENERATOR (Ref # 14031)	14031-3703	1
BREATHER (Ref # 14069)	14069-3702	2
CAP-OIL FILLER (Ref # 16115)	16115-3701	1
BOLT,6X25 (Ref # 92002)	92002-3714	11
STUD (Ref # 92004)	92004-3710	2
WASHER,8.2X16X1 (Ref # 92022)	92022-1086	1
CLAMP,L=100 (Ref # 92037)	92037-3736	2
BEARING-BALL,16005Z (Ref # 92045)	92045-1030	1
SEAL-OIL,DC254510 (Ref # 92049)	92049-3701	1
RING-O (Ref # 92055)	92055-012	1
RING-O,GENERATOR COVER (Ref # 92055A)	92055-3704	1
RING-O,ONEWAY COVER (Ref # 92055B)	92055-3705	1
BOLT-SMALL (Ref # 114)	114R0814	1
PIN-DOWEL (Ref # 551)	551R0812	4

© 2024 Kawasaki Motors Corp., U.S.A.