1986 KX500 PARTS DIAGRAM

GEAR CHANGE MECHANISM

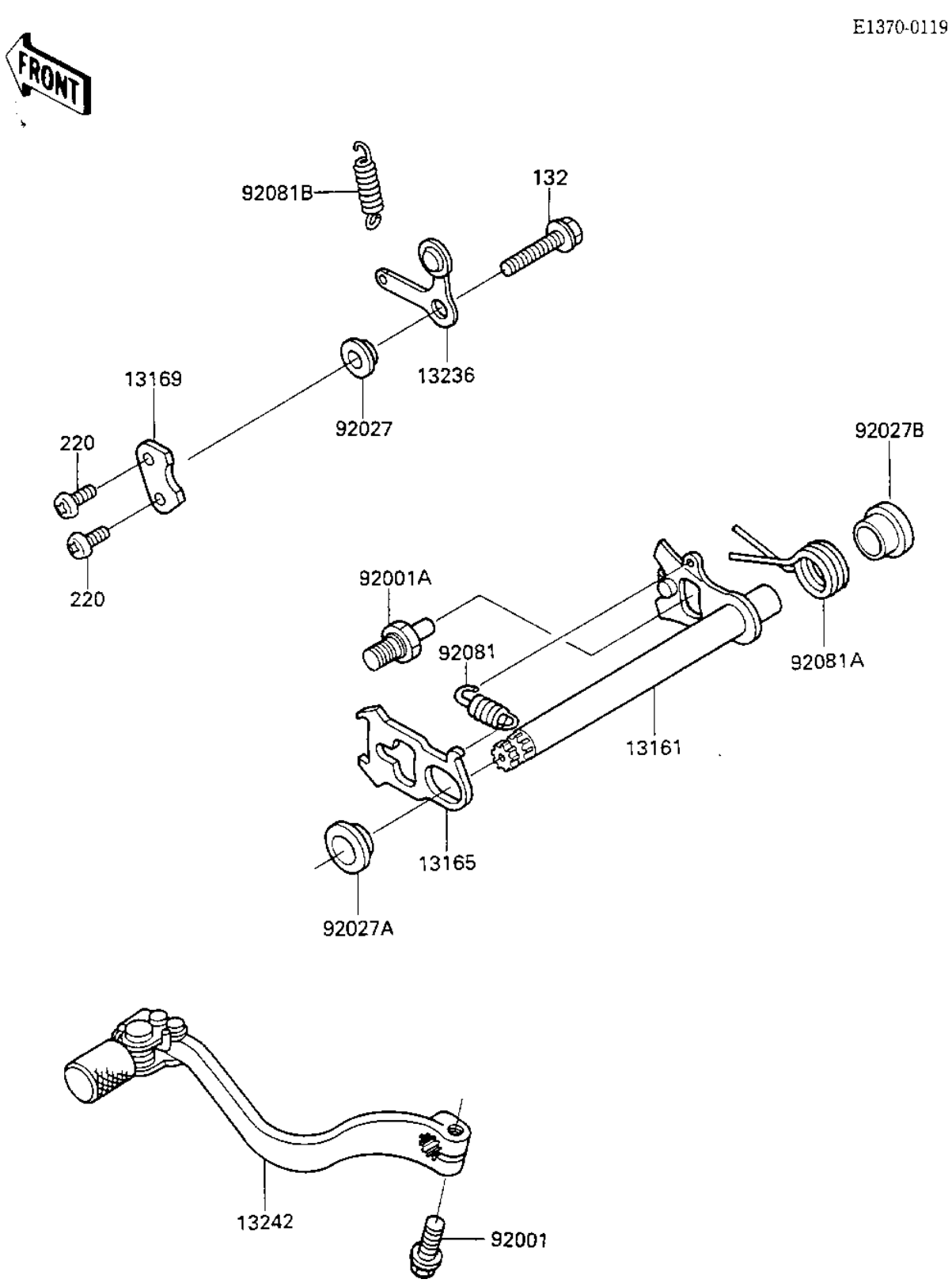

© 2024 Kawasaki Motors Corp., U.S.A.

1986 KX500 PARTS LIST

GEAR CHANGE MECHANISM

ITEM NAME	PART NUMBER	QUANTITY
LEVER-COMP-CHANGE CHANGE SHAFT (Ref # 13161)	13161-1103	1
PAWL,CHANGE LEVER (Ref # 13165)	13165-1119	1
PLATE,CHANGE DRUM (Ref # 13169)	13169-012	1
LEVER-COMP,POSITION (Ref # 13236)	13236-1152	1
LEVER-ASSY-CHANGE,PED (Ref # 13242)	13242-1166	1
BOLT,FLANGED,6X22 (Ref # 92001)	92001-1352	1
BOLT,RETURN SPRING (Ref # 92001A)	92001-1401	1
COLLAR,CHANGE SHAFT,L (Ref # 92027)	92027-1512	1
COLLAR (Ref # 92027A)	92027-1946	1
SPRING-CHANGE LEVER (Ref # 92081)	92081-076	1
SPRING,CHANGE SHAFT R (Ref # 92081A)	92081-1716	1
SPRING,CHNG DRUM LEV (Ref # 92081B)	92083-012	1
COLLAR (Ref # 92143)	92143-1055	1
BOLT-FLANGED-SMALL (Ref # 132)	132G0616	1
SCREW PAN HEAD 6X14 (Ref # 220)	220B0614	2

© 2024 Kawasaki Motors Corp., U.S.A.