1986 Voyager PARTS DIAGRAM

BATTERY CASE

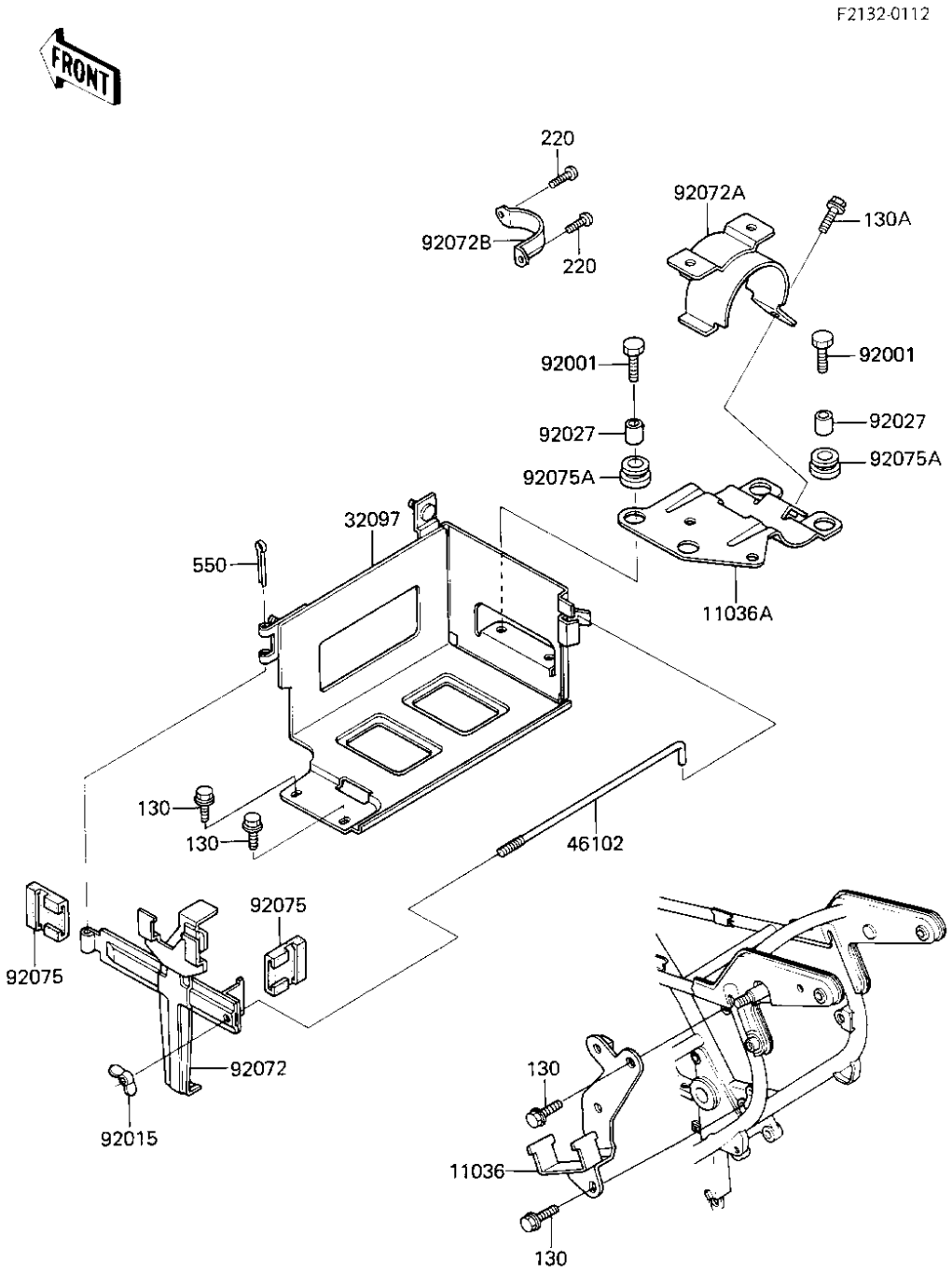

© 2025 Kawasaki Motors Corp., U.S.A.

1986 Voyager PARTS LIST

BATTERY CASE

ITEM NAME	PART NUMBER	QUANTITY
BRACKET-A,REGULATOR (Ref # 11036)	11036-1973	1
BRACKET-A,FUEL PUMP (Ref # 11036A)	11036-1974	1
CASE-BATTERY (Ref # 32097)	32097-1066	1
ROD (Ref # 46102)	46102-1065	1
BOLT,6X20 (Ref # 92001)	92001-1773	4
NUT,AIR CLEANER CAP (Ref # 92015)	92016-062	1
COLLAR 6.8X10X10.5 (Ref # 92027)	92027-120	4
BAND,BATTERY (Ref # 92072)	92072-1098	1
BAND,FUEL PUMP (Ref # 92072A)	92072-1099	1
BAND,FILTER (Ref # 92072B)	92072-1100	1
DAMPER,BATTERY BAND (Ref # 92075)	92075-1476	2
DAMPER RUBBER (Ref # 92075A)	92075-277	4
BOLT-FLANGED,6X10,BLA (Ref # 130)	130C0610	4
BOLT-FLANGED,6X12 (Ref # 130A)	130C0612	1
SCREW PAN HEAD 4X10 (Ref # 220)	220B0410	2
PIN-COTTER,4.0X35 (Ref # 550)	550D4035	1

© 2025 Kawasaki Motors Corp., U.S.A.