1986 Voyager PARTS DIAGRAM

CLUTCH

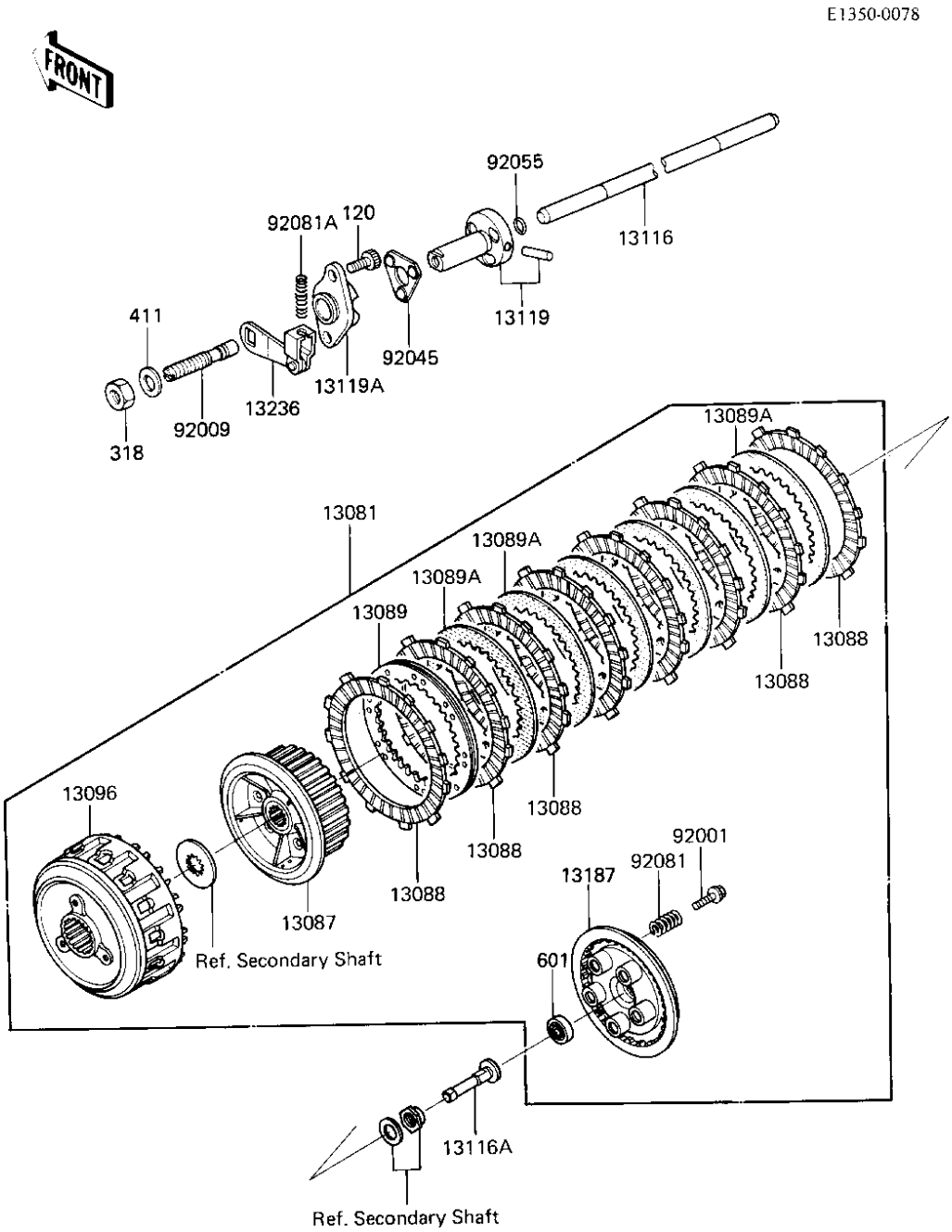

Re N
1
1
1
1
1
1
1
1
1
1
1
9
9
9
9
9
9

© 2025 Kawasaki Motors Corp., U.S.A.

1986 Voyager PARTS LIST

CLUTCH

ITEM NAME	PART NUMBER	QUANTITY
CLUTCH-ASSY (Ref # 13081)	13081-1172	1
HUB-CLUTCH (Ref # 13087)	13087-1055	1
PLATE-FRICTION (Ref # 13088)	13088-1018	8
PLATE-CLUTCH (Ref # 13089)	13089-1056	1
PLATE-CLUTCH,STEEL (Ref # 13089A)	13089-1057	6
HOUSING-CLUTCH (Ref # 13096)	13096-1059	1
ROD-PUSH,CLUTCH (Ref # 13116)	13116-1050	1
ROD-PUSH (Ref # 13116A)	13116-1108	1
CAM,CLUTCH RELEASE A (Ref # 13119)	13119-1007	1
CAM,CLUTCH RELEASE B (Ref # 13119A)	13119-1008	1
PLATE-CLUTCH OPERATIN (Ref # 13187)	13187-1015	1
LEVER-COMP,CLUTCH REL (Ref # 13236)	13236-1055	1
BOLT,CLUTCH SPR FITT (Ref # 92001)	92001-1066	5
SCREW,CLUTCH RELEASE (Ref # 92009)	92009-1052	1
BALL,ASSY,CLUTCH RELS (Ref # 92045)	92045-1023	1
"O" RING,5MM (Ref # 92055)	670B1505	1
SPRING,CLUTCH (Ref # 92081)	92081-1033	5
SPRING,COIL,9.7X95 (Ref # 92081A)	92081-1532	1
BOLT,6X14 (Ref # 120)	120P0614	2
NUT 8MM (Ref # 318)	318B0800	1
NUT 8MM (Ref # 318)	318B0800	1
WASHER PLAIN 8MM (Ref # 411)	411B0800	1
BEARING-BALL (Ref # 601)	92045-1235	1

© 2025 Kawasaki Motors Corp., U.S.A.