1985 KX250

PARTS DIAGRAM

IGNITION/GENERATOR

Kawasaki
Let the Good Times Roll®

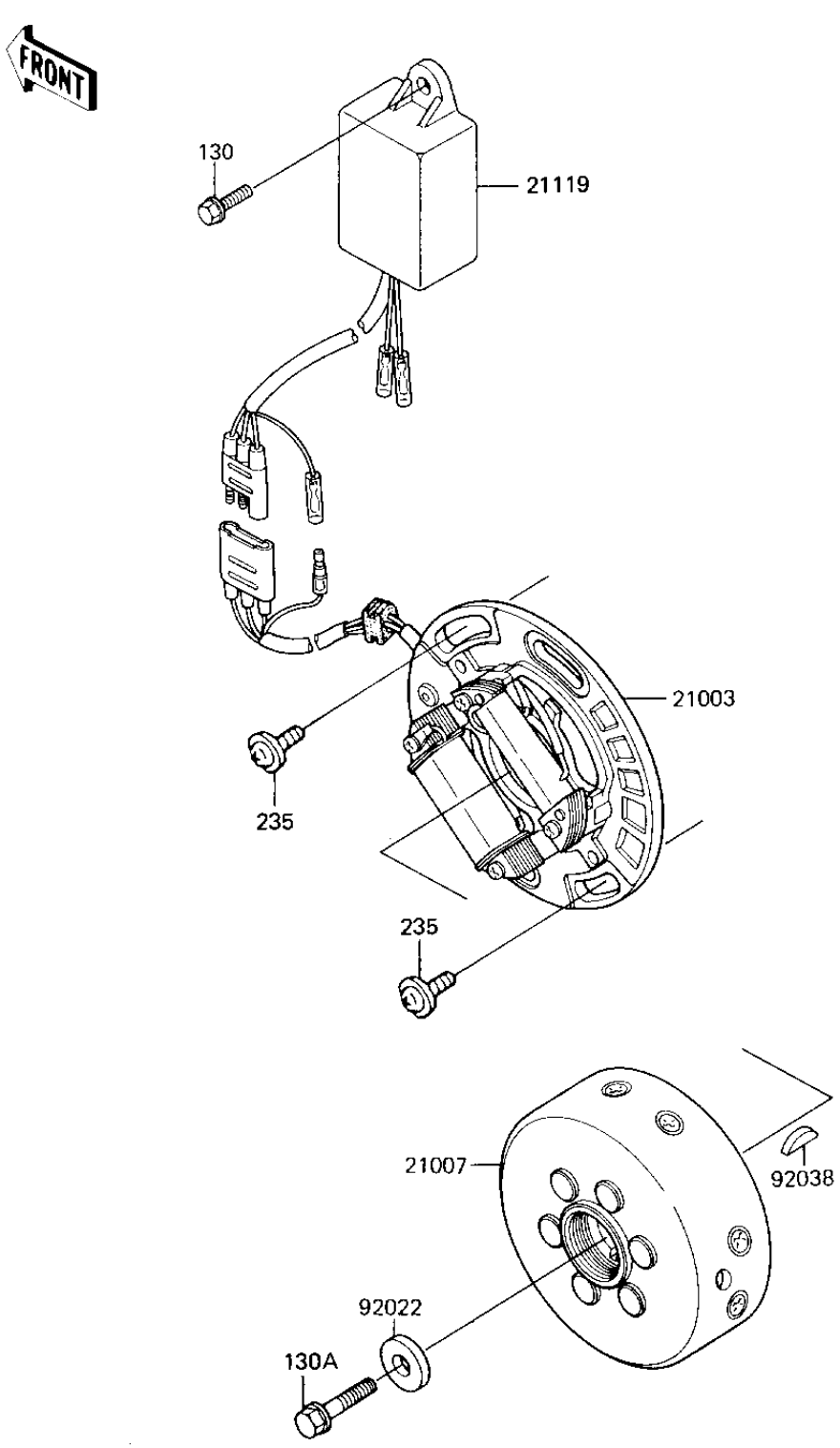

© 2026 Kawasaki Motors Corp., U.S.A.

1985 KX250

PARTS LIST

IGNITION/GENERATOR

Kawasaki
Let the Good Times Roll®

ITEM NAME	PART NUMBER	QUANTITY
STATOR (Ref # 21003)	21003-1117	1
ROTOR (Ref # 21007)	21007-1129	1
IGNITER (Ref # 21119)	21119-1148	1
WASHER,PLAIN,8MM (Ref # 92022)	92022-276	1
WOODRUFF KEY (Ref # 92038)	92038-001	1
BOLT-FLANGED,6X16 (Ref # 130)	130G0616	1
BOLT-FLANGED,8X30 (Ref # 130A)	130P0830	1
SCREW-PAN-WP-CROS (Ref # 235)	235B0616	2

© 2026 Kawasaki Motors Corp., U.S.A.