1985 KX125 PARTS DIAGRAM

CRANKSHAFT/PISTON

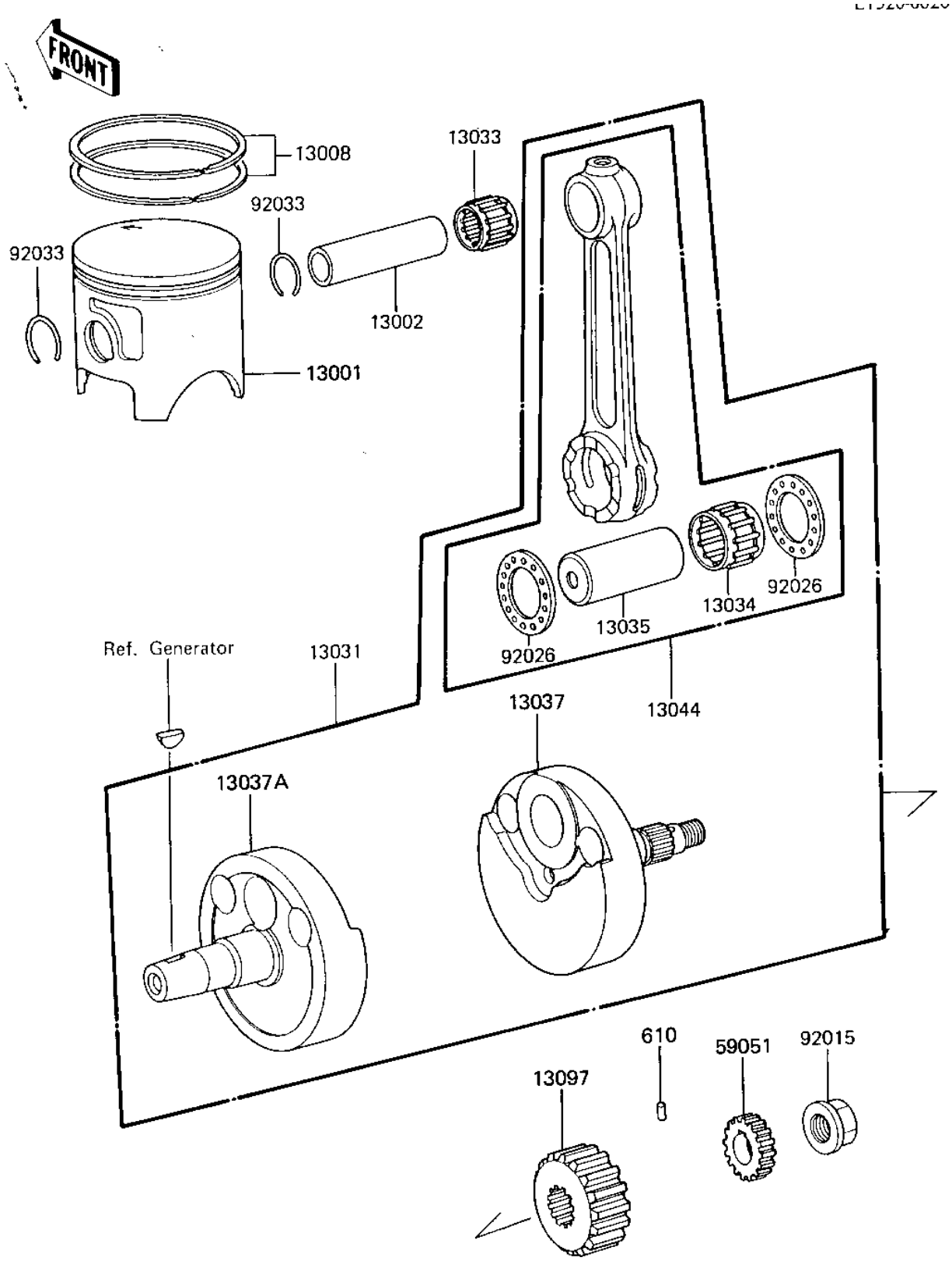

© 2026 Kawasaki Motors Corp., U.S.A.

1985 KX125 PARTS LIST

CRANKSHAFT/PISTON

ITEM NAME	PART NUMBER	QUANTITY
PISTON-ENGINE (Ref # 13001)	13001-1198	1
PIN-PISTON (Ref # 13002)	13002-1003	1
RING-SET-PISTON (Ref # 13008)	13008-5051	1
CRANKSHAFT-COMP (Ref # 13031)	13031-1180	1
BEARING-SMALL END,KBK (Ref # 13033)	13033-1051	1
BEARING-BIG END (Ref # 13034)	13034-1079	1
PIN (Ref # 13035)	13035-1010-01	1
CRANKSHAFT,RH (Ref # 13037)	13037-1243	1
CRANKSHAFT,LH (Ref # 13037A)	13037-1251	1
SET-CONNECTING ROD (Ref # 13044)	13044-5065	1
GEAR-PRIMARY SPUR,18T (Ref # 13097)	13097-1127	1
GEAR-SPUR,WATER PUMP, (Ref # 59051)	59051-1035	1
NUT,10MM (Ref # 92015)	92015-1161	1
SPACER,22.2X37X1.0 (Ref # 92026)	92026-1136	2
CIRCLIP PISTON PIN (Ref # 92033)	92036-004	2
PIN DOWEL 4X8 (Ref # 610)	610A0408	1

© 2026 Kawasaki Motors Corp., U.S.A.