1986 KL600 PARTS DIAGRAM

OIL PUMP/OIL FILTER

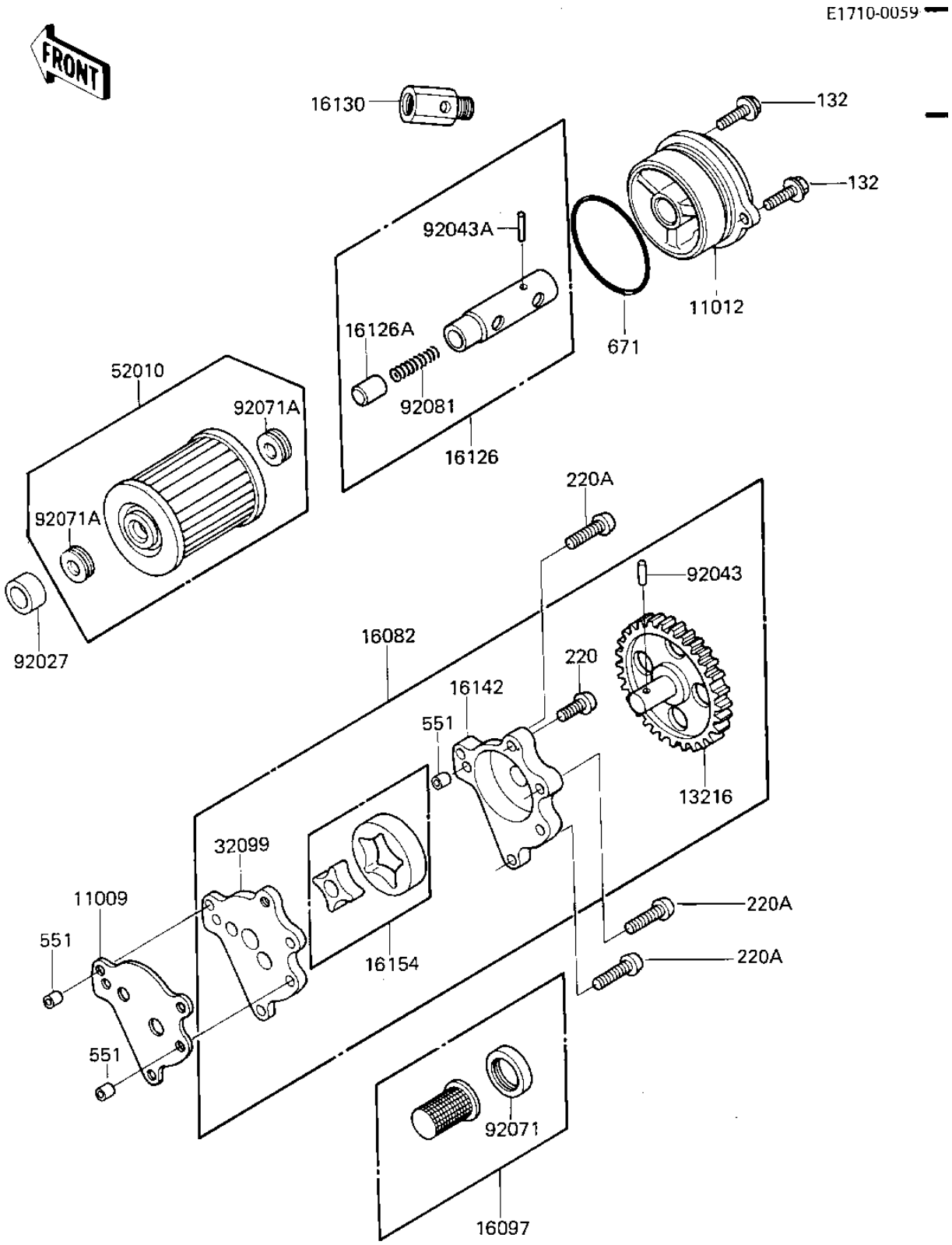

© 2026 Kawasaki Motors Corp., U.S.A.

1986 KL600 PARTS LIST

OIL PUMP/OIL FILTER

ITEM NAME	PART NUMBER	QUANTITY
GASKET,OIL PUMP (Ref # 11009)	11060-1115	1
CAP,OIL FILTER (Ref # 11012)	11012-1538	1
GEAR-COMP,OIL PUMP (Ref # 13216)	13216-1064	1
PUMP-ASSY-OIL (Ref # 16082)	16082-1088	1
STRAINER ASSY,OIL (Ref # 16097)	16097-1001	1
BOLT ASSY,OIL FILTER (Ref # 16126)	16156-002	1
PISTON (Ref # 16126A)	92136-002	1
RELEAF VALVE ASSY (Ref # 16130)	16130-1001	1
COVER,OIL PUMP (Ref # 16142)	16142-006	1
ROTOR,OIL PUMP (Ref # 16154)	16154-5001	1
BODY,OIL PUMP (Ref # 32099)	16141-006	1
FILTER,OIL (Ref # 52010)	16099-004	1
COLLAR,13X20X9 (Ref # 92027)	92027-1695	1
PIN,DOWEL (Ref # 92043)	92042-041	1
SPRING PIN (Ref # 92043A)	92043-123	1
GROMMET,OIL STRAINER (Ref # 92071)	92071-100	1
GROMMET,OIL FILTER (Ref # 92071A)	92071-101	2
SPRING,PISTON (Ref # 92081)	92081-043	1
BOLT-FLANGED-SMALL (Ref # 132)	132J0620	2
SCREW PAN HEAD 6X16 (Ref # 220)	220B0616	1
SCREW PAN HEAD 6X25 (Ref # 220A)	220B0625	3
PIN,DOWEL,6X8 (Ref # 551)	551A0608	3
"0" RING,55MM (Ref # 671)	671B2555	1

© 2026 Kawasaki Motors Corp., U.S.A.