1984 KLT200

PARTS DIAGRAM

CYLINDER HEAD/COVERS ('84 KLT200-C2)

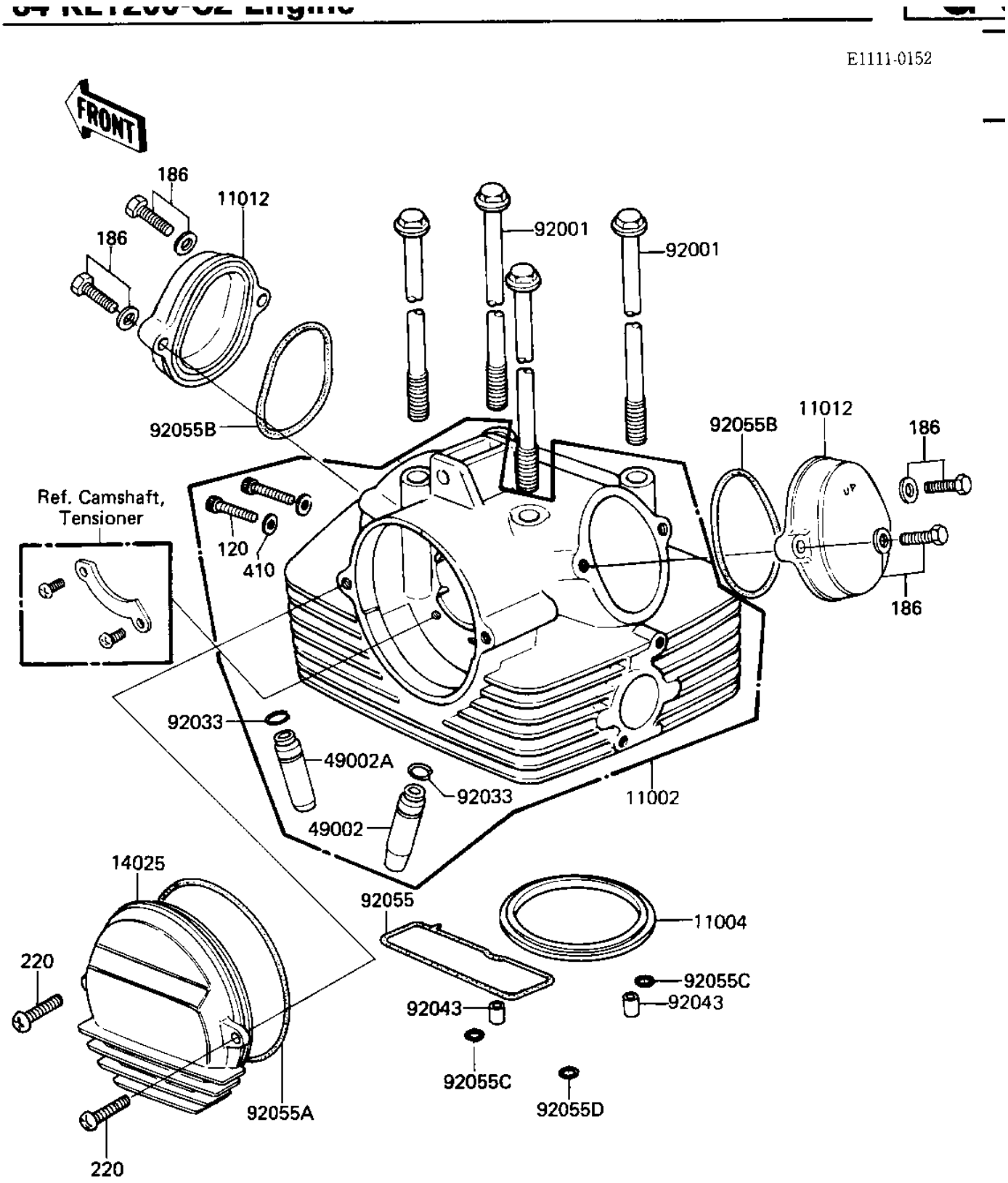

© 2026 Kawasaki Motors Corp., U.S.A.

1984 KLT200

PARTS LIST

CYLINDER HEAD/COVERS ('84 KLT200-C2)

Kawasaki
Let the Good Times Roll®

ITEM NAME	PART NUMBER	QUANTITY
HEAD-ASSY-CYLINDER (Ref # 11002)	11002-5029	1
GASKET,CYLINDER HEAD (Ref # 11004)	11004-1004	1
CAP,ROCKER,F.BLACK (Ref # 11012)	11012-1270	2
COVER,CAMSHAFT,F.BLAC (Ref # 14025)	14025-1549	1
GUIDE,INLET VALVE (Ref # 49002)	12013-009	AR
GUIDE,EXHAUST VALVE (Ref # 49002A)	49002-1002	AR
BOLT,8X233 (Ref # 92001)	92003-220	4
CIRCLIP-VALVE (Ref # 92033)	92036-023	2
PIN,DOWEL,10X8.2X14 (Ref # 92043)	92043-1037	2
"0" RING (Ref # 92055)	92055-105	1
"O" RING,99M/M (Ref # 92055A)	92055-107	1
"0" RING,53.5MM (Ref # 92055B)	92055-112	2
RING-O,10MM (Ref # 92055C)	92055-1149	2
O RING,10MM (Ref # 92055D)	92055-1150	1
BOLT-SOCKET (Ref # 120)	120Z0830	2
BOLT-UPSET-WP (Ref # 186)	186Y0625	4
SCREW-PAN-CROS (Ref # 220)	220X0616	2
WASHER PLAIN 8MM (Ref # 410)	410B0800	2

© 2026 Kawasaki Motors Corp., U.S.A.