1982 Eddie Lawson Replica PARTS DIAGRAM

STAND

F2190-0133

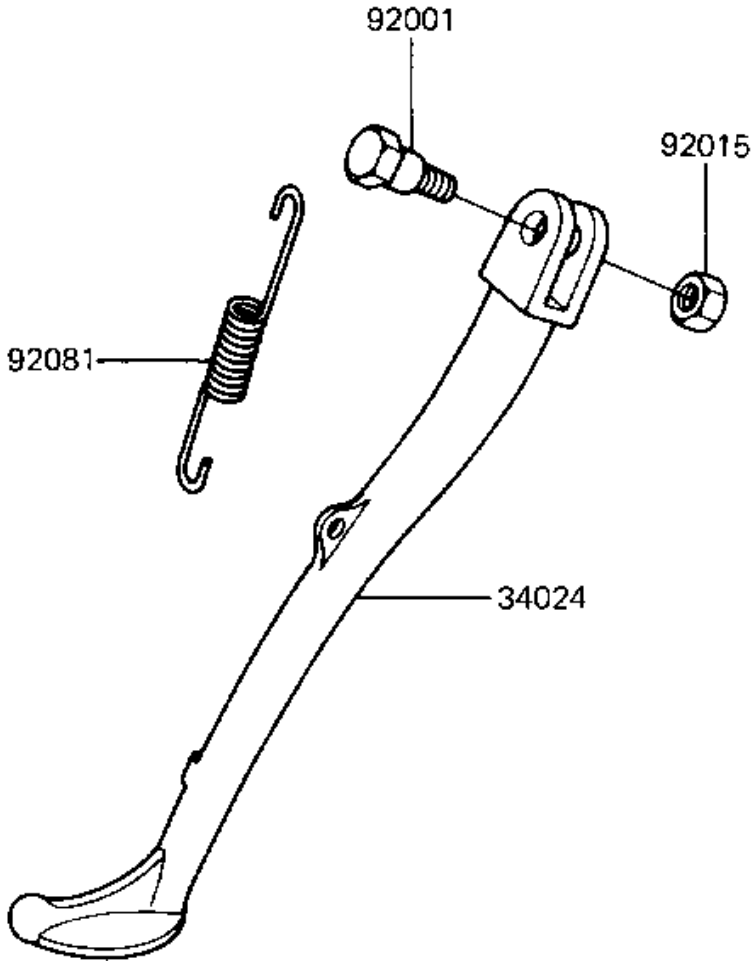

© 2024 Kawasaki Motors Corp., U.S.A.

1982 Eddie Lawson Replica PARTS LIST

STAND

ITEM NAME	PART NUMBER	QUANTITY
STAND-SIDE (Ref # 34024)	34024-1070	1
BOLT,8X160,BLACK (Ref # 92001)	92001-1543	1
NUT,LOCK,10MM,BLACK (Ref # 92015)	92015-1188	1
SPRING,SIDE STAND (Ref # 92081)	92081-1727	1

© 2024 Kawasaki Motors Corp., U.S.A.