1994 750 SS PARTS DIAGRAM

Ignition System(JH750-A1/A2/A3)

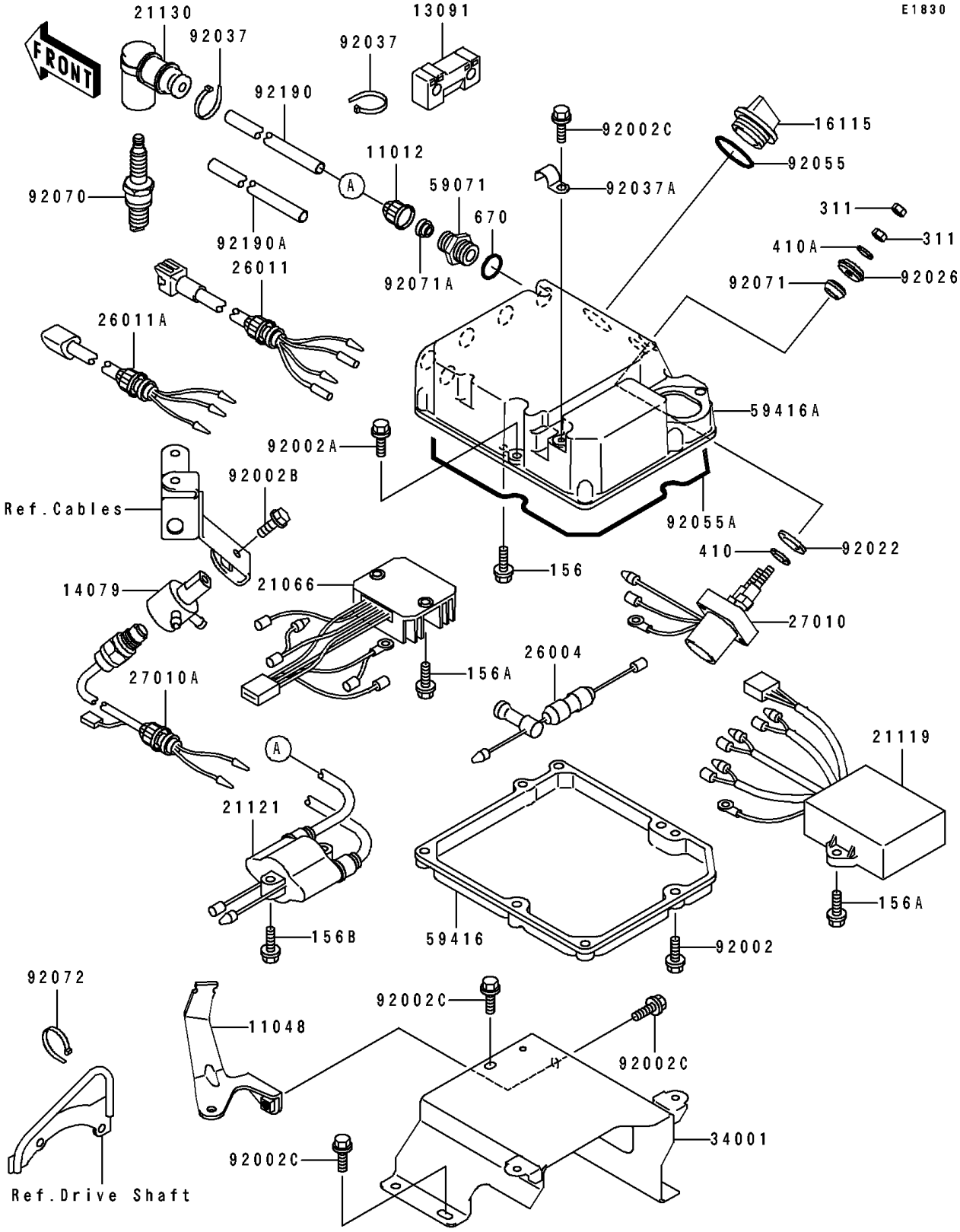

© 2026 Kawasaki Motors Corp., U.S.A.

1994 750 SS PARTS LIST

Ignition System(JH750-A1/A2/A3)

ITEM NAME	PART NUMBER	QUANTITY
CAP (Ref # 11012)	11012-3005	2
BRACKET,HIGH TENSION CORD (Ref # 11048)	11048-3736	1
HOLDER,HIGH TENSION CORD (Ref # 13091)	13091-3771	1
HOLDER-ASSY (Ref # 14079)	14079-3705	1
CAP-OIL FILLER (Ref # 16115)	16115-1009	1
REGULATOR-VOLTAGE (Ref # 21066)	21066-3711	1
IGNITER (Ref # 21119)	21119-3734	1
COIL-IGNITION (Ref # 21121)	21121-3704	1
CAP-SPARK PLUG (Ref # 21130)	21130-3706	2
FUSE-ASSY (Ref # 26004)	26004-3712	1
WIRE-LEAD (Ref # 26011)	26011-3799	1
WIRE-LEAD (Ref # 26011A)	26011-3800	1
SWITCH,STARTER RELAY (Ref # 27010)	27010-3724	1
SWITCH (Ref # 27010A)	27010-3733	1
STAND,ELECTRIC CASE (Ref # 34001)	34001-3705	1
JOINT (Ref # 59071)	59071-3001	5
CASE-ELECTRIC,LWR (Ref # 59416)	59416-3728	1
CASE-ELECTRIC,UPP (Ref # 59416A)	59416-3729	1
BOLT,6X25 (Ref # 92002)	92002-3714	5
BOLT,6X35 (Ref # 92002A)	92002-3715	3
BOLT,6X16 (Ref # 92002B)	92002-3728	1
BOLT,6X12 (Ref # 92002C)	92002-3763	5
WASHER (Ref # 92022)	92022-3035	2
SPACER (Ref # 92026)	92026-3703	2
CLAMP (Ref # 92037)	92037-1173	4
CLAMP (Ref # 92037A)	92037-3730	1
RING-O,31.5X2.6 (Ref # 92055)	92055-049	1
RING-O,ELECTRIC CASE (Ref # 92055A)	92055-3733	1
PLUG-SPARK,BR8ES(NGK) (Ref # 92070)	92070-2078	2

© 2026 Kawasaki Motors Corp., U.S.A.

1994 750 SS PARTS LIST

Ignition System(JH750-A1/A2/A3)

ITEM NAME	PART NUMBER	QUANTITY
GROMMET (Ref # 92071)	92071-3004	2
GROMMET (Ref # 92071A)	92071-527	2
BAND (Ref # 92072)	92072-3778	2
TUBE,HIGH TENSION,L=330 (Ref # 92190)	92190-3707	1
TUBE,HIGH TENSION,L=210 (Ref # 92190A)	92190-3708	1
BOLT-WP,6X14 (Ref # 156)	156R0614	1
BOLT-WP,6X22 (Ref # 156A)	156R0622	4
BOLT-WP (Ref # 156B)	156R0630	2
NUT-HEX,6MM (Ref # 311)	311R0600	4
WASHER-PLAIN-SMALL,10MM (Ref # 410)	410B1000	2
WASHER-PLAIN-SMALL,6MM (Ref # 410A)	410S0600	2
O RING,16MM (Ref # 670)	670B2016	5

© 2026 Kawasaki Motors Corp., U.S.A.