1982 LTD PARTS DIAGRAM

CRANKCASE ('81-'83 A2/A3/A4)

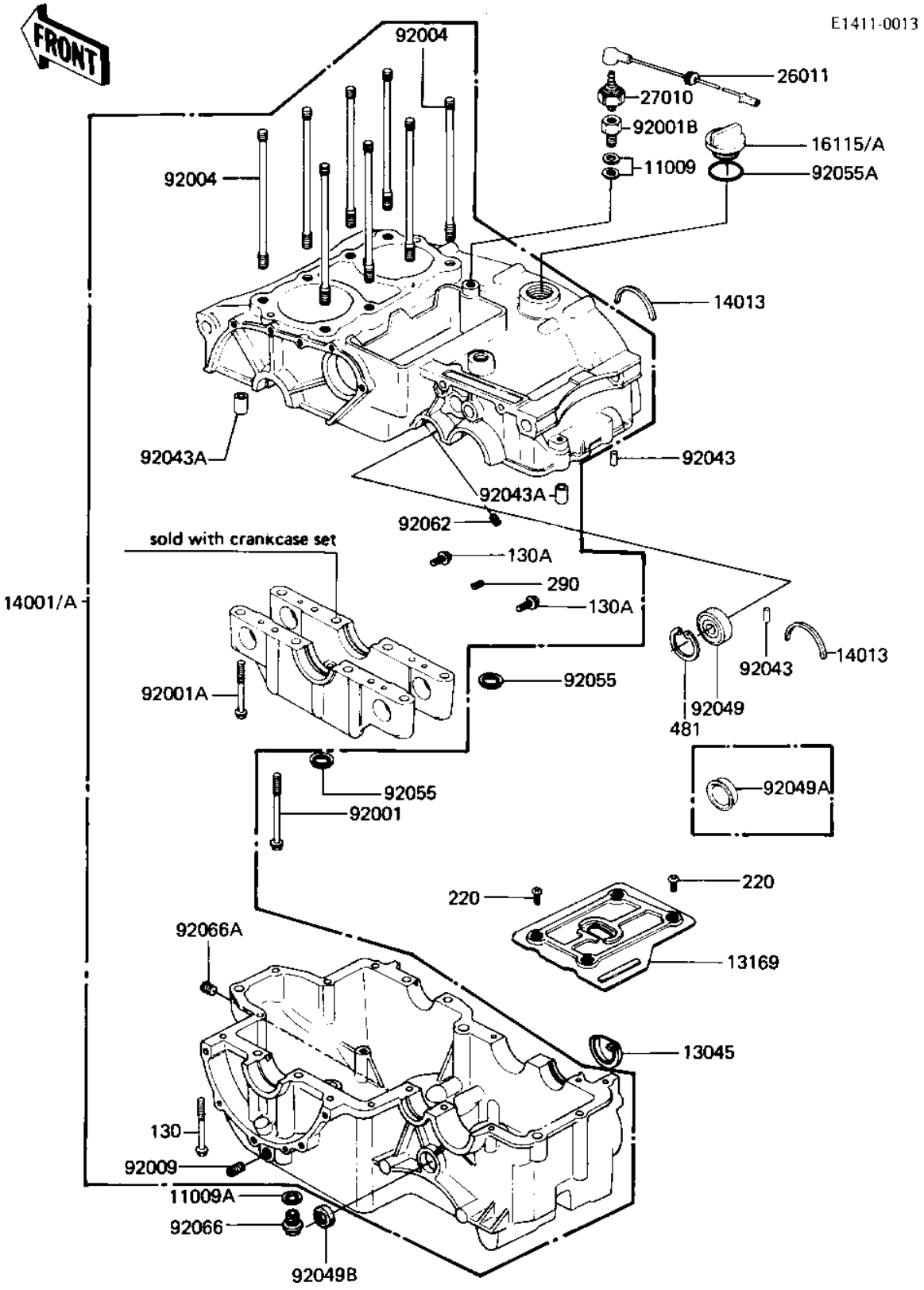

© 2024 Kawasaki Motors Corp., U.S.A.

1982 LTD PARTS LIST

CRANKCASE ('81-'83 A2/A3/A4)

ITEM NAME	PART NUMBER	QUANTITY
GASKET,10X14.5X1.5 (Ref # 11009)	11009-1105	2
GASKET,DRIN PLUG (Ref # 11009A)	92065-097	1
RECEIVER,OIL (Ref # 13045)	13045-1001	1
PLATE,CRANKCASE (Ref # 13169)	13169-1103	1
SET-CRANKCASE (Ref # 14001A)	14001-5087	1
RING BEARING SETTING (Ref # 14013)	14013-004	2
PLUG,OIL FILLER (Ref # 16115)	16115-013	1
WIRE,LEAD,OIL SWITCH (Ref # 26011)	26011-1078	1
SWITCH,OIL PRESSURE (Ref # 27010)	27010-1157	1
BOLT,FLANGED,10X91 (Ref # 92001)	92001-1004	4
BOLT,FLANGED,8X58 (Ref # 92001A)	92001-1005	4
BOLT,OIL SWITCH (Ref # 92001B)	92001-1020	1
STUD,10X153 (Ref # 92004)	92004-062	8
SET SCREW,PT 1/4 (Ref # 92009)	92013-010	2
PIN DOWEL 6MM (Ref # 92043)	92042-016	2
PIN,DOWEL,10X8.2X14 (Ref # 92043A)	92043-1037	2
SEAL-OIL,PLUG (Ref # 92049A)	92049-1074	1
OIL SEAL,TB13225.5 (Ref # 92049B)	92051-005	1
O RING,0.D=18MM (Ref # 92055)	92055-048	2
"0" RING,31MM (Ref # 92055A)	92055-049	1
NOZZLE,OIL BIAS (Ref # 92062)	92062-011	1
PLUG,OIL DRAIN,12X15 (Ref # 92066)	92066-1174	1
PLUG,OIL SWITCH (Ref # 92066A)	92066-059	1
BOLT,FLANGED,6X55 (Ref # 130)	130G0655	2
BOLT,FLANGED,6X8 (Ref # 130A)	130P0608	2
SCREW PAN HEAD 6X12 (Ref # 220)	220B0612	4
SCREW,6X6 (Ref # 290)	290Q0606	1
CIRCLIP,36M/M (Ref # 481)	481J3600	1

© 2024 Kawasaki Motors Corp., U.S.A.