2002 Ultra 150 PARTS DIAGRAM

Jet Pump

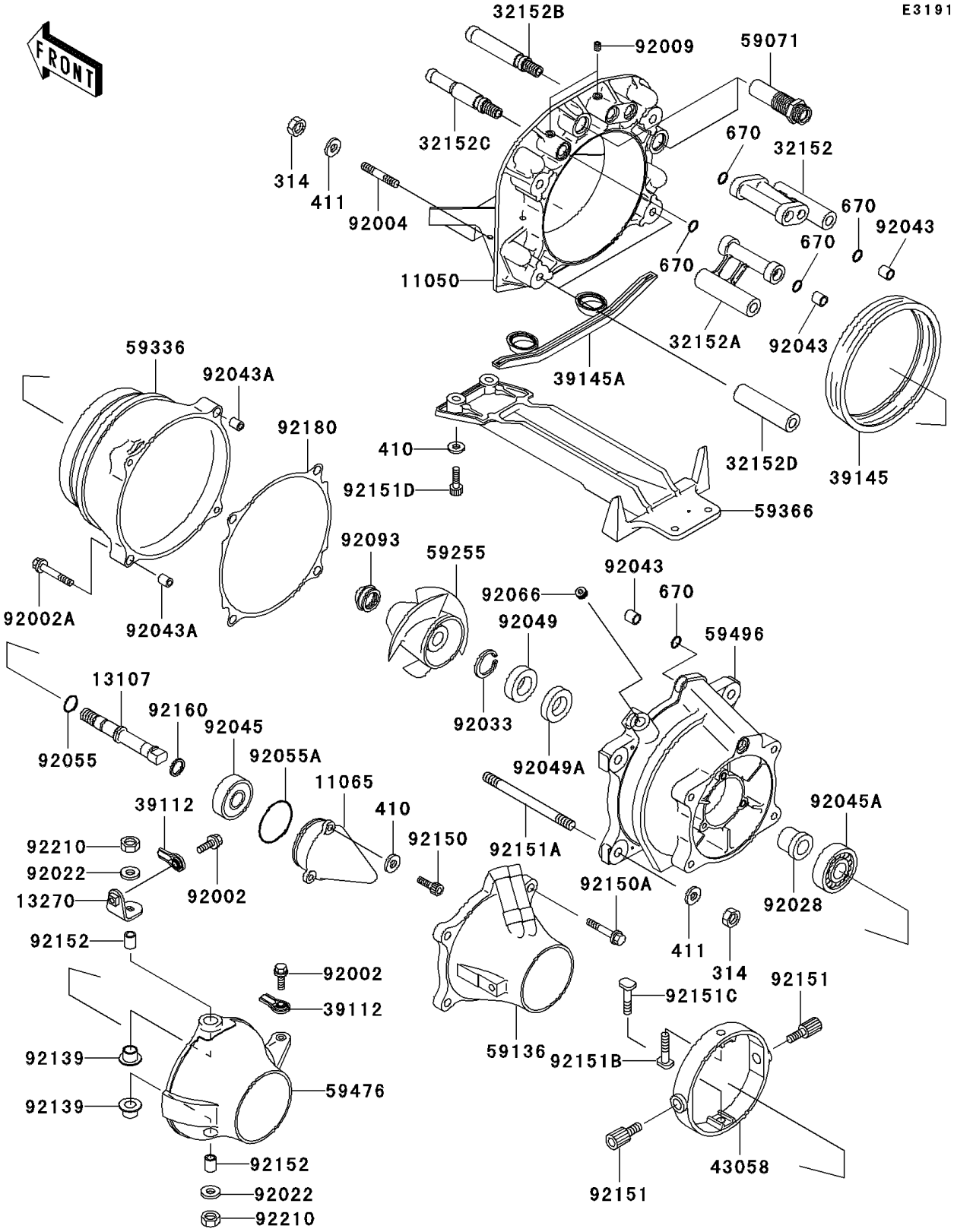

© 2025 Kawasaki Motors Corp., U.S.A.

2002 Ultra 150 PARTS LIST

Jet Pump

ITEM NAME	PART NUMBER	QUANTITY
BRACKET (Ref # 11050)	11050-3758	1
CAP (Ref # 11065)	11065-3705	1
SHAFT (Ref # 13107)	13107-3773	1
PLATE (Ref # 13270)	13270-3905	1
PIPE (Ref # 32152)	32152-3742	1
PIPE (Ref # 32152A)	32152-3743	1
PIPE (Ref # 32152B)	32152-3744	1
PIPE (Ref # 32152C)	32152-3745	1
PIPE (Ref # 32152D)	32152-3751	2
RODEND-TIE (Ref # 39112)	39112-3703	2
TRIM-SEAL (Ref # 39145)	39145-3758	1
TRIM-SEAL (Ref # 39145A)	39145-3766	1
RING,TILT (Ref # 43058)	43058-3731	1
JOINT,CABLE (Ref # 59071)	59071-3760	2
NOZZLE-PUMP (Ref # 59136)	59136-3742	1
IMPELLER-COMP (Ref # 59255)	59255-3715	1
CASE-PUMP (Ref # 59336)	59336-3713	1
GRATE (Ref # 59366)	59366-3718	1
NOZZLE-STRG (Ref # 59476)	59476-3738	1
VANE-GUIDE (Ref # 59496)	59496-3735	1
BOLT,6X25 (Ref # 92002)	92002-3714	2
BOLT,6X40 (Ref # 92002A)	92002-3716	4
STUD,10X35 (Ref # 92004)	92004-3732	4
SCREW (Ref # 92009)	92009-3780	2
WASHER,PLAIN (Ref # 92022)	92022-3026	2
BUSHING (Ref # 92028)	92028-3773	1
RING-SNAP (Ref # 92033)	92033-3730	1
PIN,12X12 (Ref # 92043)	92043-3745	3
PIN,10X12 (Ref # 92043A)	92043-3747	2

© 2025 Kawasaki Motors Corp., U.S.A.

2002 Ultra 150 PARTS LIST

Jet Pump

ITEM NAME	PART NUMBER	QUANTITY
BEARING-BALL,62022RD (Ref # 92045)	92045-3721	1
BEARING-BALL (Ref # 92045A)	92045-3730	1
SEAL-OIL,HVAJ25X45X7 (Ref # 92049)	92049-3726	1
SEAL-OIL,SCJ25X45X7 (Ref # 92049A)	92049-3727	1
RING-O,OIL FILTER (Ref # 92055)	92055-1011	1
RING-O,52.6X2.4 (Ref # 92055A)	92055-1520	1
PLUG,PT1/4X8.9 (Ref # 92066)	92066-3765	1
SEAL (Ref # 92093)	92093-3749	1
BUSHING (Ref # 92139)	92139-3701	2
BOLT,SOCKET,6X18 (Ref # 92150)	92150-3775	3
BOLT,8X35 (Ref # 92150A)	92150-3792	4
NUT-HEX-FINE,10MM (Ref # 314)	314R1000	8
WASHER-PLAIN-SMALL,6MM (Ref # 410)	410S0600	7
WASHER-PLAIN,10MM (Ref # 411)	411S1000	8
O RING,12MM (Ref # 670)	670B2012	5
BOLT (Ref # 92151)	92151-3705	2
BOLT,10X110 (Ref # 92151A)	92151-3733	4
BOLT,8MM (Ref # 92151B)	92151-3735	1
BOLT,8X32 (Ref # 92151C)	92151-3752	1
BOLT,SOCKET,6X20 (Ref # 92151D)	92151-3774	4
COLLAR,8.2X11.8X15 (Ref # 92152)	92152-3703	2
DAMPER (Ref # 92160)	92160-3932	1
SHIM,T=0.5 (Ref # 92180)	92180-3705	AR
NUT,LOCK,8MM (Ref # 92210)	92210-3742	2

© 2025 Kawasaki Motors Corp., U.S.A.