1986 Police 1000 PARTS DIAGRAM

HANDLEBAR

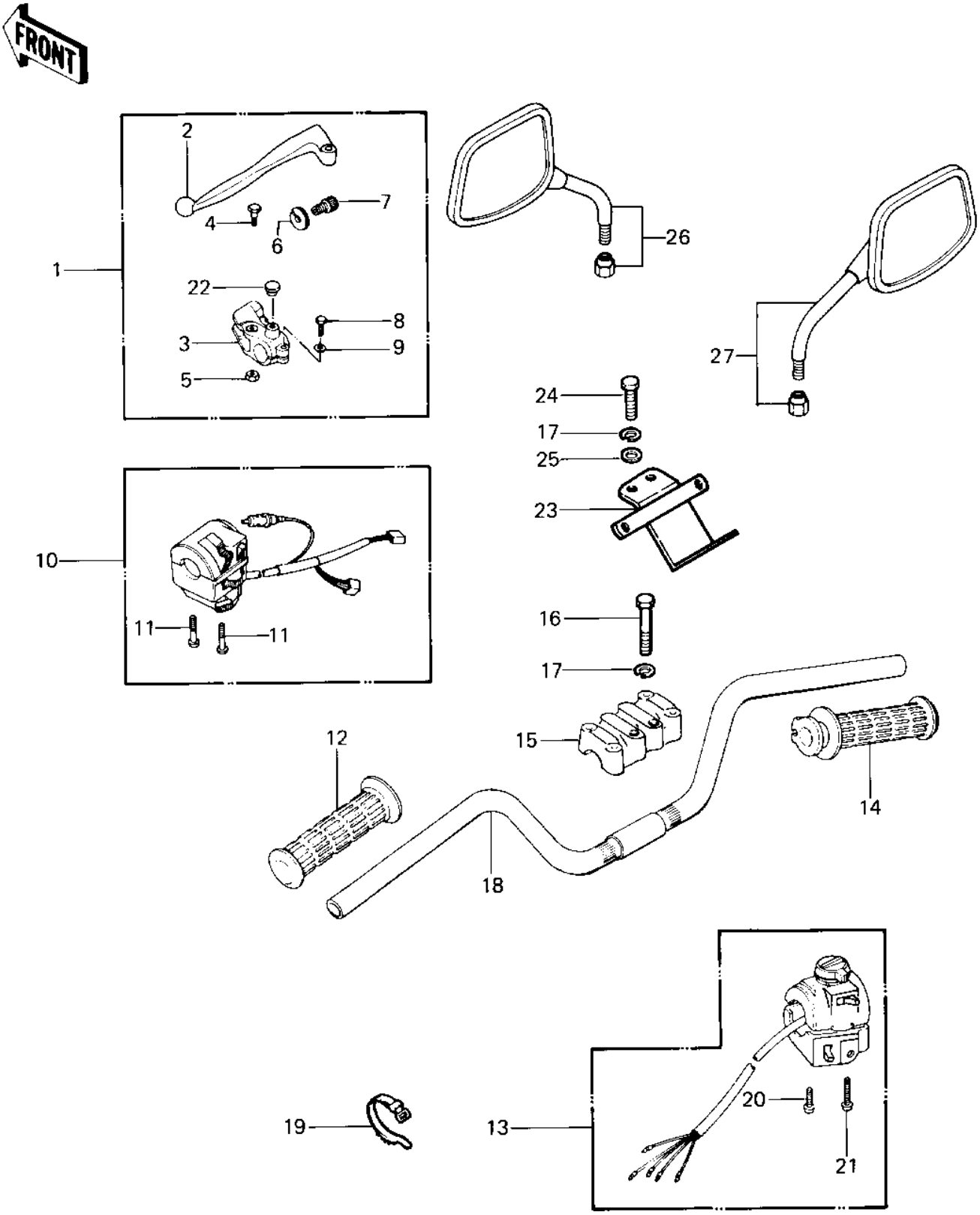

© 2024 Kawasaki Motors Corp., U.S.A.

1986 Police 1000 PARTS LIST

HANDLEBAR

ITEM NAME	PART NUMBER	QUANTITY
LEVER-ASSY-GRIP,CLTCH (Ref # 1)	46076-1019	
LEVER,CLUTCH (Ref # 2)	46092-1005	
HOLDER,CLUTCH LEVER (Ref # 3)	13091-1046	
BOLT,CLUTCH LEVER FIT (Ref # 4)	92001-1075	
NUT (Ref # 5)	92019-008	
NUT-LOCK (Ref # 6)	46056-005	
SCREW,CABLE ADJUSTER (Ref # 7)	92009-1022	
SCREW CABLE ADJUST (Ref # 7)	46055-003	
BOLT, HEX HEAD 6X22 (Ref # 8)	110N0622	
WASHER PLAIN 6MM (Ref # 9)	410B0600	
HOUSING-ASSY-CONTROL, (Ref # 10)	46091-1455	
SCREW-PAN-CROS (Ref # 11)	220B0535	
GRIP,LH (Ref # 12)	46075-1020	
HOUSING-ASSY-CNTRL,RH (Ref # 13)	46091-1212	
GRIP-ASSY (Ref # 14)	46019-1022	
HOLDER-HANDLE (Ref # 15)	46012-4001	
BOLT 8X38 (Ref # 16)	92001-1405	
BOLT,FLANGED,8X35 (Ref # 16)	92001-1910	
WASHER SPRING 8MM (Ref # 17)	461F0800	
WASHER SPRING 8MM (Ref # 17)	461F0800	
HANDLE (Ref # 18)	46003-4008	
HANDLE (Ref # 18)	46003-4008	
BAND,MIDDLE (Ref # 19)	92072-031	
SCREW PAN HEAD 5X30 (Ref # 20)	220B0530	
SCREW-PAN-CROS (Ref # 21)	220B0540	
CAP-RR VIEW MIRROR (Ref # 22)	92102-009	
BRACKET,SIREN (OPT) (Ref # 23)	23062-4003	
BOLT HEAD LAMP MOUNT (Ref # 24)	92007-003	
WASHER PLAIN 8MM (Ref # 25)	410B0800	

© 2024 Kawasaki Motors Corp., U.S.A.