1982 GPz PARTS DIAGRAM

FRONT WHEEL/HUB

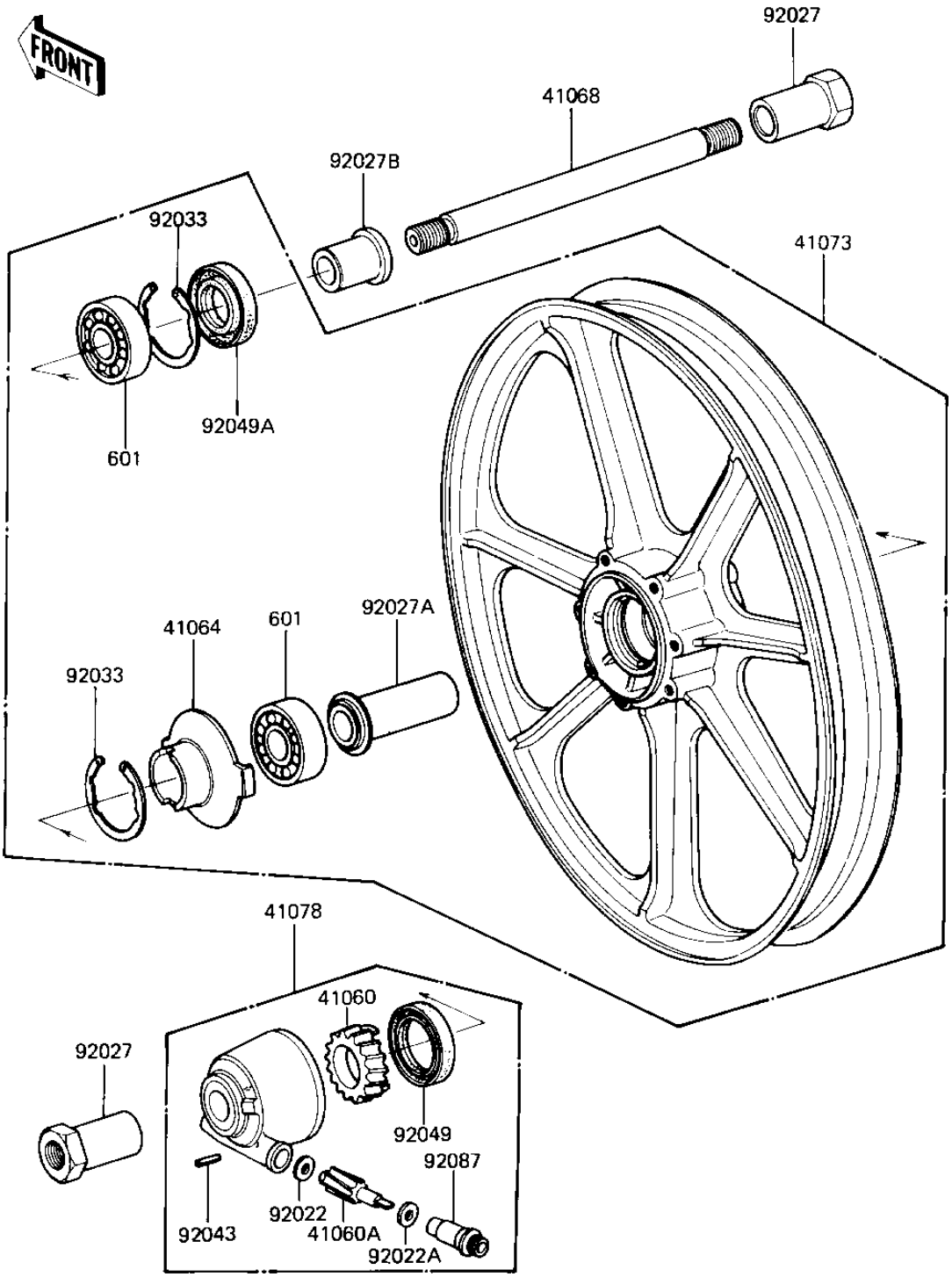

© 2024 Kawasaki Motors Corp., U.S.A.

1982 GPz PARTS LIST

FRONT WHEEL/HUB

ITEM NAME	PART NUMBER	QUANTITY
GEAR,SPEEDOMETER (Ref # 41060)	41059-026	1
PINION,SPEEDOMETER,9T (Ref # 41060A)	41060-1016	1
RECEIVER,SPEEDOMETER (Ref # 41064)	41064-1006	1
AXLE,FRONT (Ref # 41068)	41068-1031	1
WHEEL-ASSY,FR,SOLID,B (Ref # 41073)	41073-1139-21	1
CASE-ASSY-METER GEAR, (Ref # 41078)	41078-1024	1
WASHER THRST SPD PINI (Ref # 92022)	41063-001	1
WASHER THRST SPD PINI (Ref # 92022A)	41063-001	1
COLLAR,FRONT AXLE (Ref # 92027)	41069-031	2
COLLAR,FR HUB L=55M/M (Ref # 92027A)	92027-1223	1
COLLAR,FR AXLE L=30MM (Ref # 92027B)	92027-1225	1
CIRCLIP,42MM (Ref # 92033)	92033-1041	2
PIN,SPRING (Ref # 92043)	41082-001	1
OIL SEAL,BJN30427-C3 (Ref # 92049)	92049-1057	1
OIL SEAL,AG1144AO (Ref # 92049A)	92049-1058	1
BUSHING,METER GEAR (Ref # 92087)	92087-1002	1
BEARING BALL #6302Z (Ref # 601)	601B6302Z	2

© 2024 Kawasaki Motors Corp., U.S.A.