1982 GPz PARTS DIAGRAM

CYLINDER HEAD COVER

E1112-0036

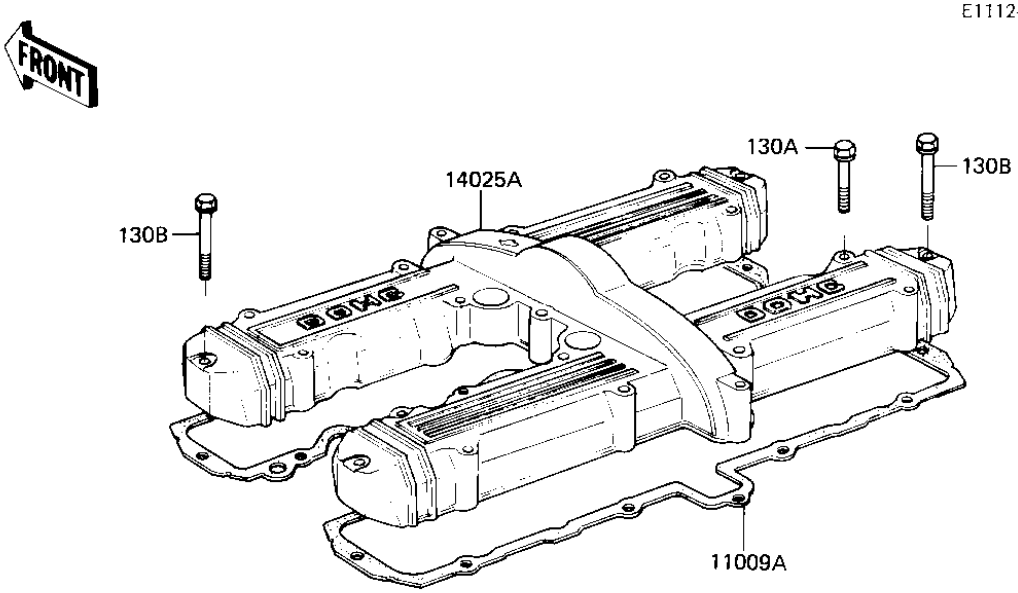

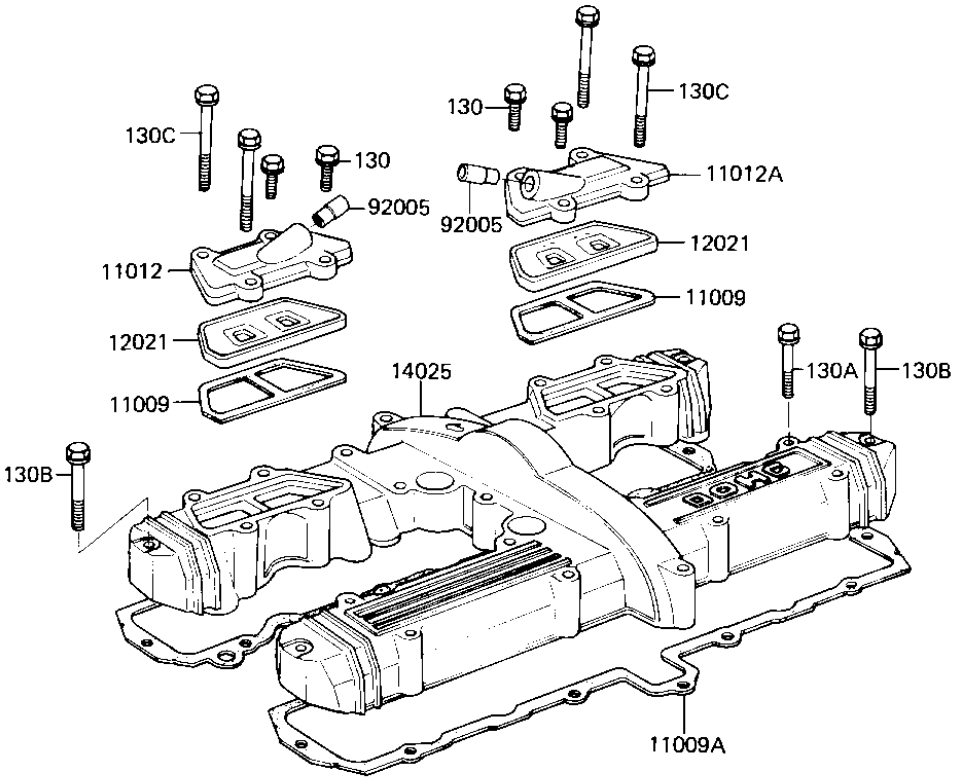

© 2024 Kawasaki Motors Corp., U.S.A.

1982 GPz PARTS LIST

CYLINDER HEAD COVER

ITEM NAME	PART NUMBER	QUANTITY
GASKET,REED VALVE (Ref # 11009)	11060-1066	2
GASKET,CYLINDER HEAD (Ref # 11009A)	11009-1274	1
CAP,REED VALVE,LH,BLA (Ref # 11012)	11012-1226	1
CAP,REED VALVE,RH,BLA (Ref # 11012A)	11012-1227	1
VALVE-ASSY-REED (Ref # 12021)	12021-1008	2
COVER,CYLINDER HEAD,B (Ref # 14025)	14025-1432	1
COVER,CYLINDER HEAD,B (Ref # 14025A)	14025-1433	1
FITTING, REED VALVE (Ref # 92005)	92005-1006	2
BOLT-FLANGED,6X20 (Ref # 130)	130J0620	4
BOLT-FLANGED,6X40,BLA (Ref # 130A)	130J0640	16
BOLT-FLANGED,6X40,BLA (Ref # 130A)	130J0640	20
BOLT,6X45 (Ref # 130B)	92002-1069	4
BOLT-FLANGED,6X65 (Ref # 130C)	130J0665	4

© 2024 Kawasaki Motors Corp., U.S.A.