1994 X2 PARTS DIAGRAM

Seat

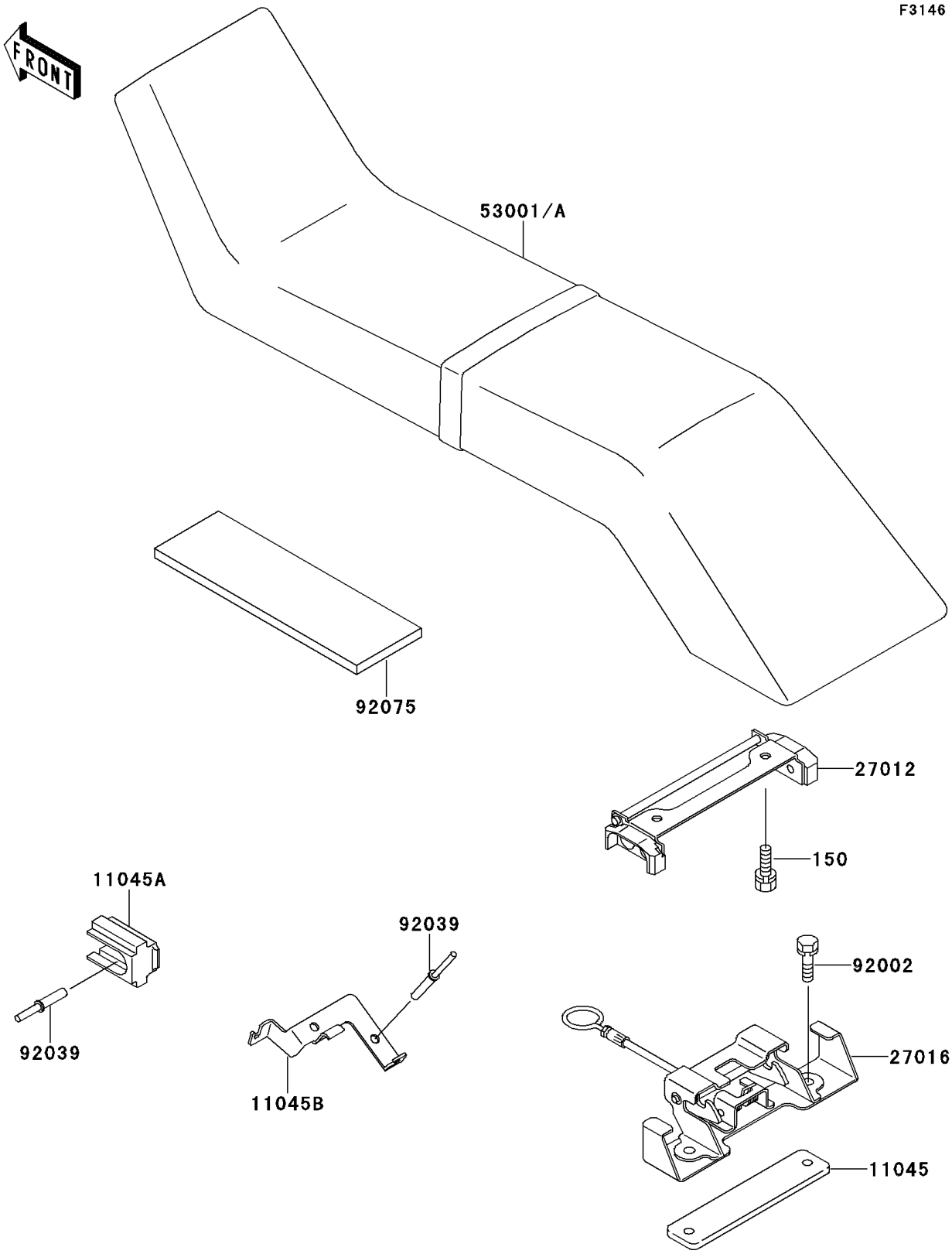

© 2024 Kawasaki Motors Corp., U.S.A.

1994 X2 PARTS LIST

Seat

ITEM NAME	PART NUMBER	QUANTITY
BOLT-WS,6X14 (Ref # 150)	150R0614	2
BRACKET,SEAT LOCK (Ref # 11045)	11045-3704	1
BRACKET,SEAT HOOK GUIDE (Ref # 11045A)	11045-3737	1
BRACKET,SEAT LOCK CABLE GUIDE (Ref # 11045B)	11045-3756	1
HOOK,SEAT LOCK (Ref # 27012)	27012-3709	1
LOCK-ASSY,SEAT (Ref # 27016)	27016-3707	1
SEAT-ASSY,J.S.VIOLET (Ref # 53001A)	53001-3704-PJ	1
BOLT,6X25 (Ref # 92002)	92002-3775	2
RIVET (Ref # 92039)	92039-3701	4
DAMPER (Ref # 92075)	92075-3723	1

© 2024 Kawasaki Motors Corp., U.S.A.