1990 X2 PARTS DIAGRAM

Cooling

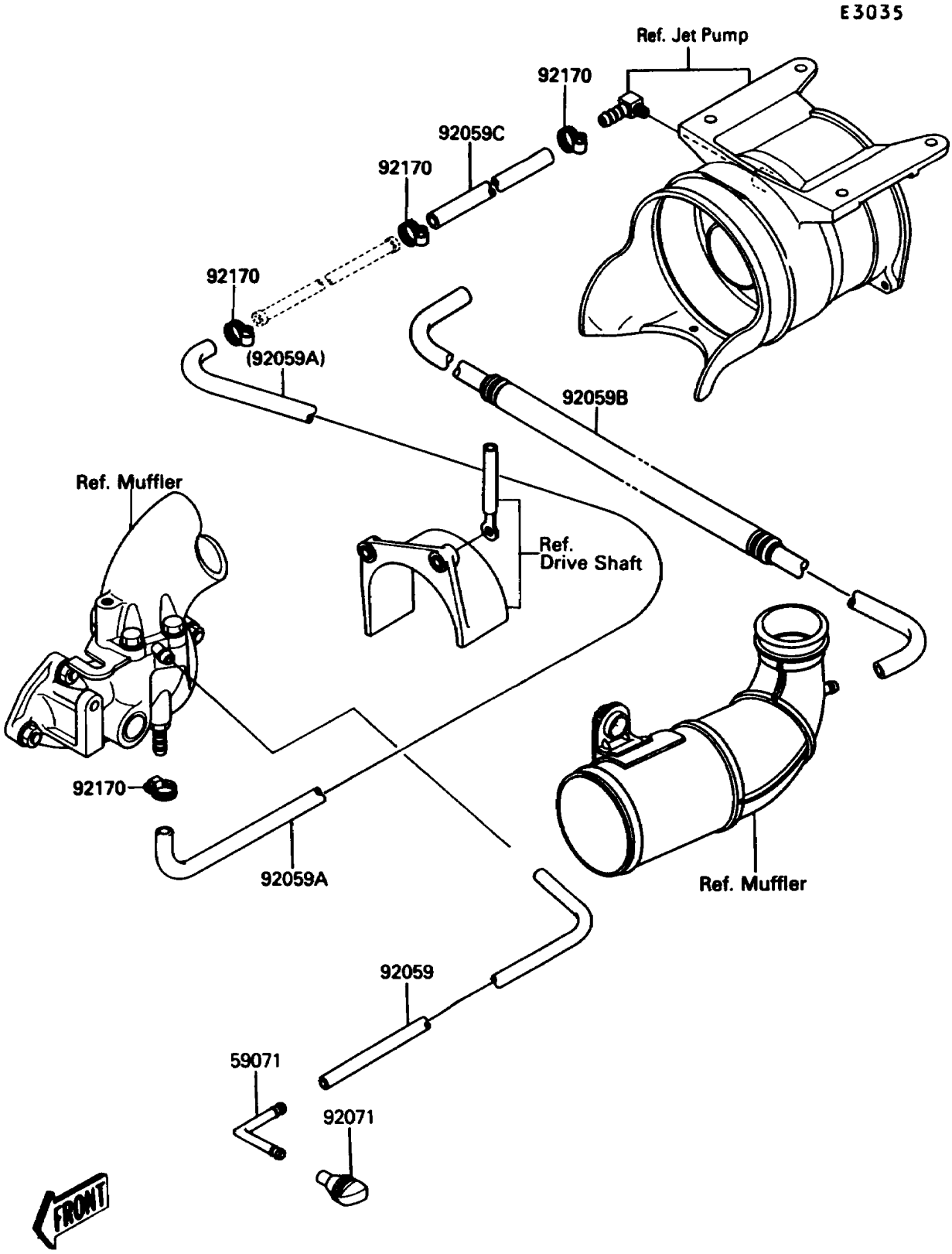

© 2025 Kawasaki Motors Corp., U.S.A.

1990 X2 PARTS LIST

Cooling

ITEM NAME	PART NUMBER	QUANTITY
JOINT (Ref # 59071)	59071-3706	1
TUBE,5.8X10.8X650 (Ref # 92059)	92059-3759	1
TUBE,9X16X600 (Ref # 92059A)	92059-3787	1
TUBE,L=490 (Ref # 92059B)	92059-3862	1
TUBE,9X360 (Ref # 92059C)	92059-503	1
GROMMET (Ref # 92071)	92071-3736	1
CLAMP (Ref # 92170)	92170-3718	4

© 2025 Kawasaki Motors Corp., U.S.A.