1990 X2 PARTS DIAGRAM

Ignition System

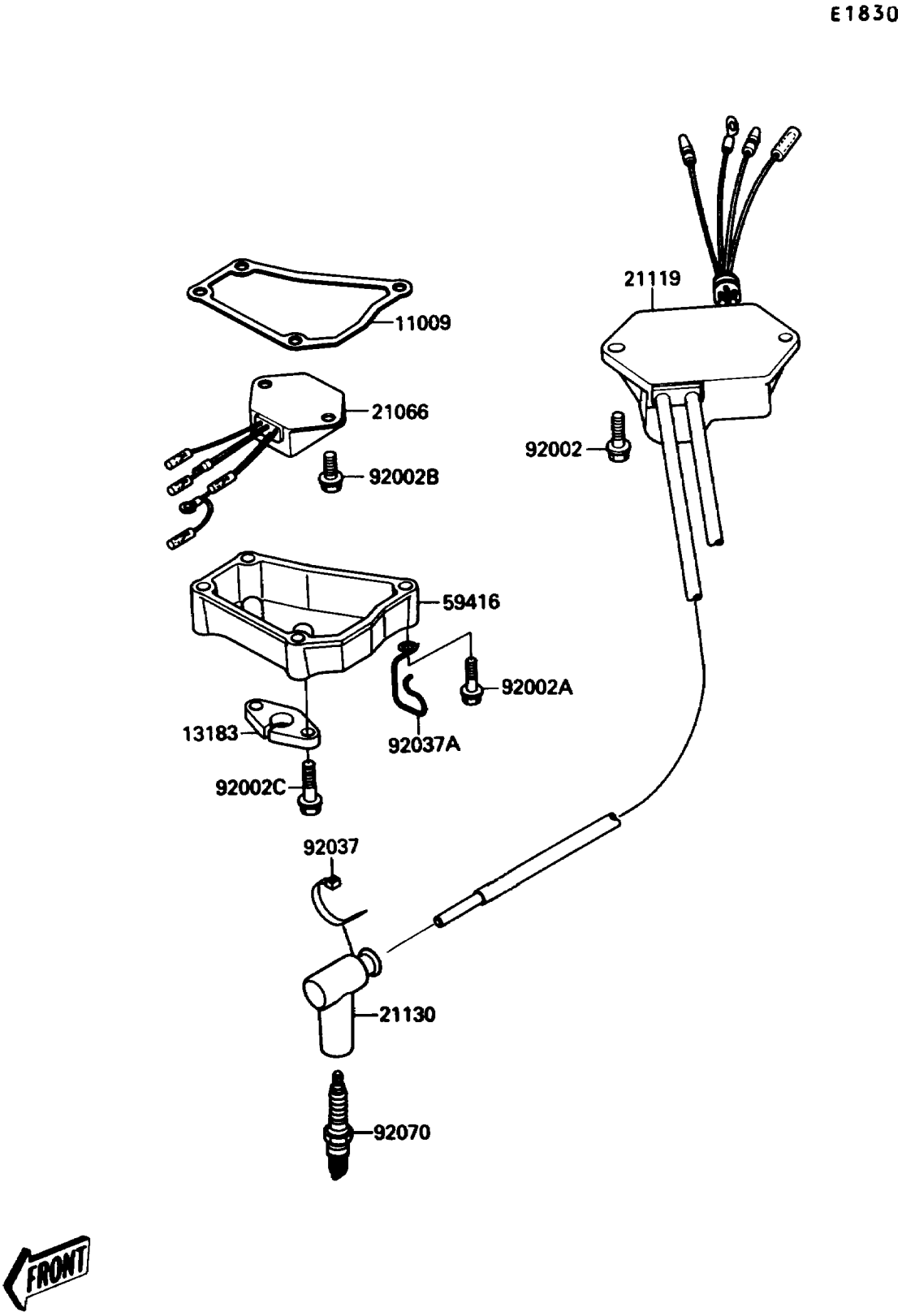

© 2025 Kawasaki Motors Corp., U.S.A.

1990 X2 PARTS LIST

Ignition System

ITEM NAME	PART NUMBER	QUANTITY
GASKET (Ref # 11009)	11009-3738	1
PLATE (Ref # 13183)	13183-3712	1
REGULATOR-VOLTAGE (Ref # 21066)	21066-3703	1
IGNITER (Ref # 21119)	21119-3712	1
CAP-SPARK PLUG (Ref # 21130)	21130-1062	2
CASE-ELECTRIC (Ref # 59416)	59416-3709	1
BOLT,6X25 (Ref # 92002)	92002-3714	2
BOLT,6X40 (Ref # 92002A)	92002-3716	4
BOLT,6X16 (Ref # 92002B)	92002-3728	2
BOLT,6X20 (Ref # 92002C)	92002-3755	2
CLAMP (Ref # 92037)	92037-1173	2
CLAMP (Ref # 92037A)	92037-3739	1
PLUG-SPARK,BR7ES(NGK) (Ref # 92070)	92070-3701	2

© 2025 Kawasaki Motors Corp., U.S.A.