1999 Ninja® 500R PARTS DIAGRAM

Swingarm

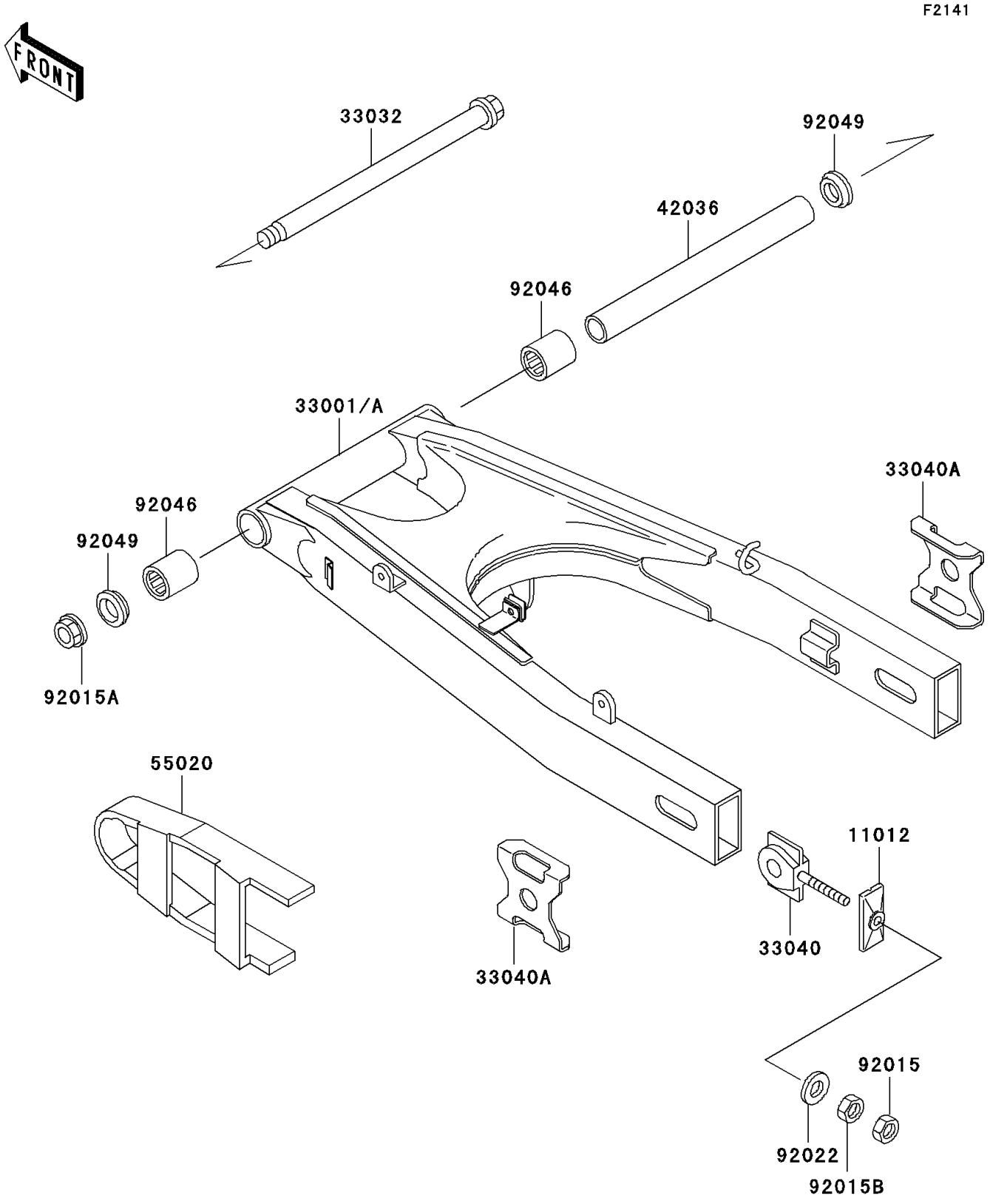

© 2024 Kawasaki Motors Corp., U.S.A.

1999 Ninja® 500R PARTS LIST

Swingarm

ITEM NAME	PART NUMBER	QUANTITY
CAP,CHAIN ADJUSTER,BLACK (Ref # 11012)	11012-1871-10	2
ARM-COMP-SWING,BLACK (Ref # 33001)	33001-1444-10	1
SHAFT-SWING ARM (Ref # 33032)	33032-1109	1
ADJUSTER-CHAIN,INNER (Ref # 33040)	33040-1116	2
ADJUSTER-CHAIN,OUTER,BLACK (Ref # 33040A)	33040-1137-10	2
SLEEVE,14.1X22X220 (Ref # 42036)	42036-1212	1
GUARD,CHAIN (Ref # 55020)	55020-1500	1
NUT,8MM (Ref # 92015)	92015-1364	2
NUT,14MM (Ref # 92015A)	92015-1407	1
NUT,8MM (Ref # 92015B)	92015-1658	2
WASHER,8.5X16X1.2 (Ref # 92022)	92022-1582	2
BEARING-NEEDLE,F-2220 (Ref # 92046)	92046-1162	2
SEAL-OIL,MHA22 28 5.7F (Ref # 92049)	92049-1254	2

© 2024 Kawasaki Motors Corp., U.S.A.