1989 Ninja® 250R PARTS DIAGRAM

Headlight(s)

F2710-0262

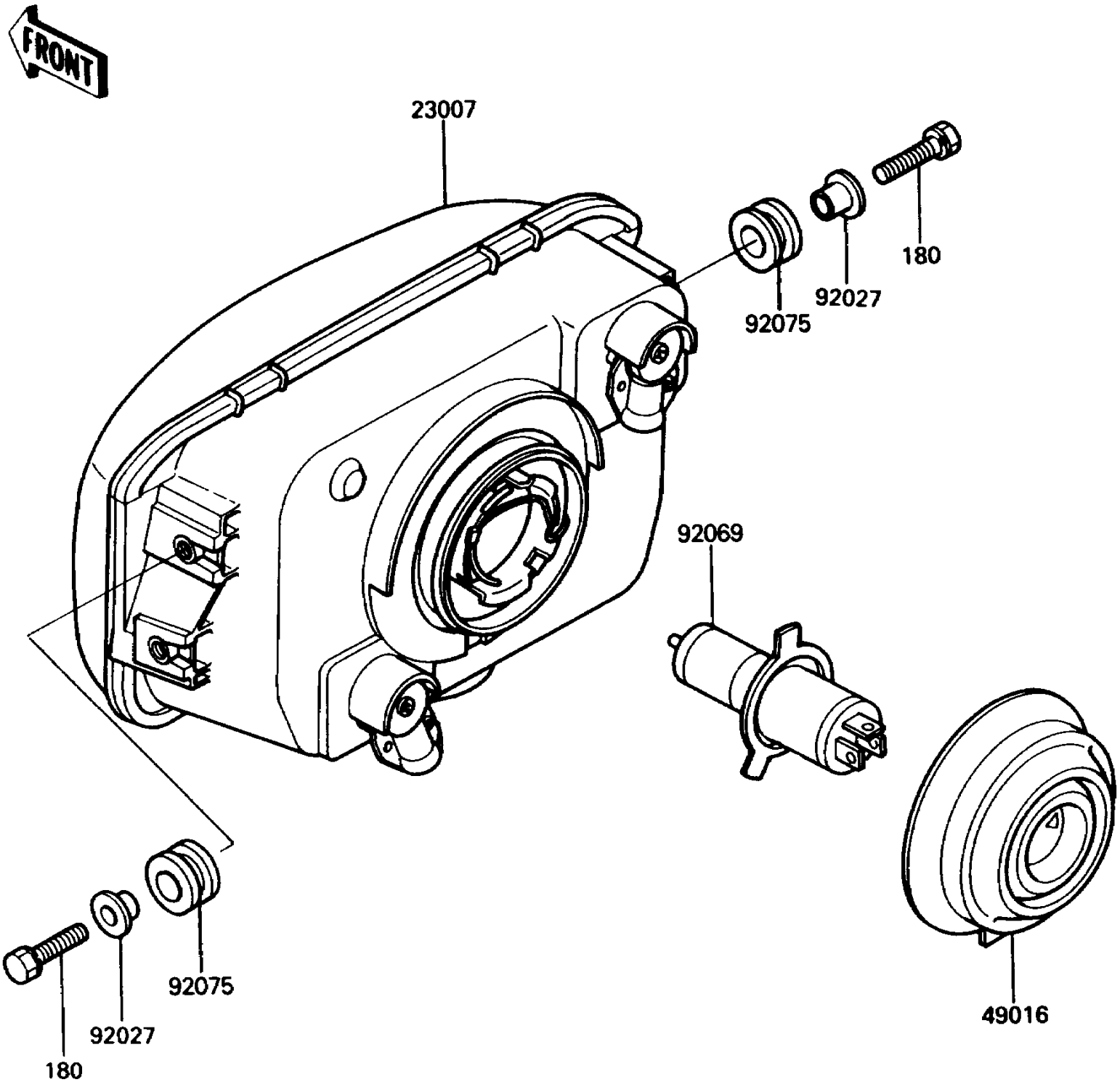

© 2024 Kawasaki Motors Corp., U.S.A.

1989 Ninja® 250R PARTS LIST

Headlight(s)

ITEM NAME	PART NUMBER	QUANTITY
LENS-COMP,HEAD LAMP (Ref # 23007)	23007-1194	1
COVER-SEAL,HEAD LAMP (Ref # 49016)	49016-1108	1
COLLAR,L=13.1 (Ref # 92027)	92027-251	4
BULB,12V 60/55W,H4 (Ref # 92069)	92069-1002	1
DAMPER (Ref # 92075)	92075-1690	4
BOLT-UPSET-WS,6X25 (Ref # 180)	180D0625	4

© 2024 Kawasaki Motors Corp., U.S.A.