2006 ER-6n (Australian) PARTS DIAGRAM

Front Hub

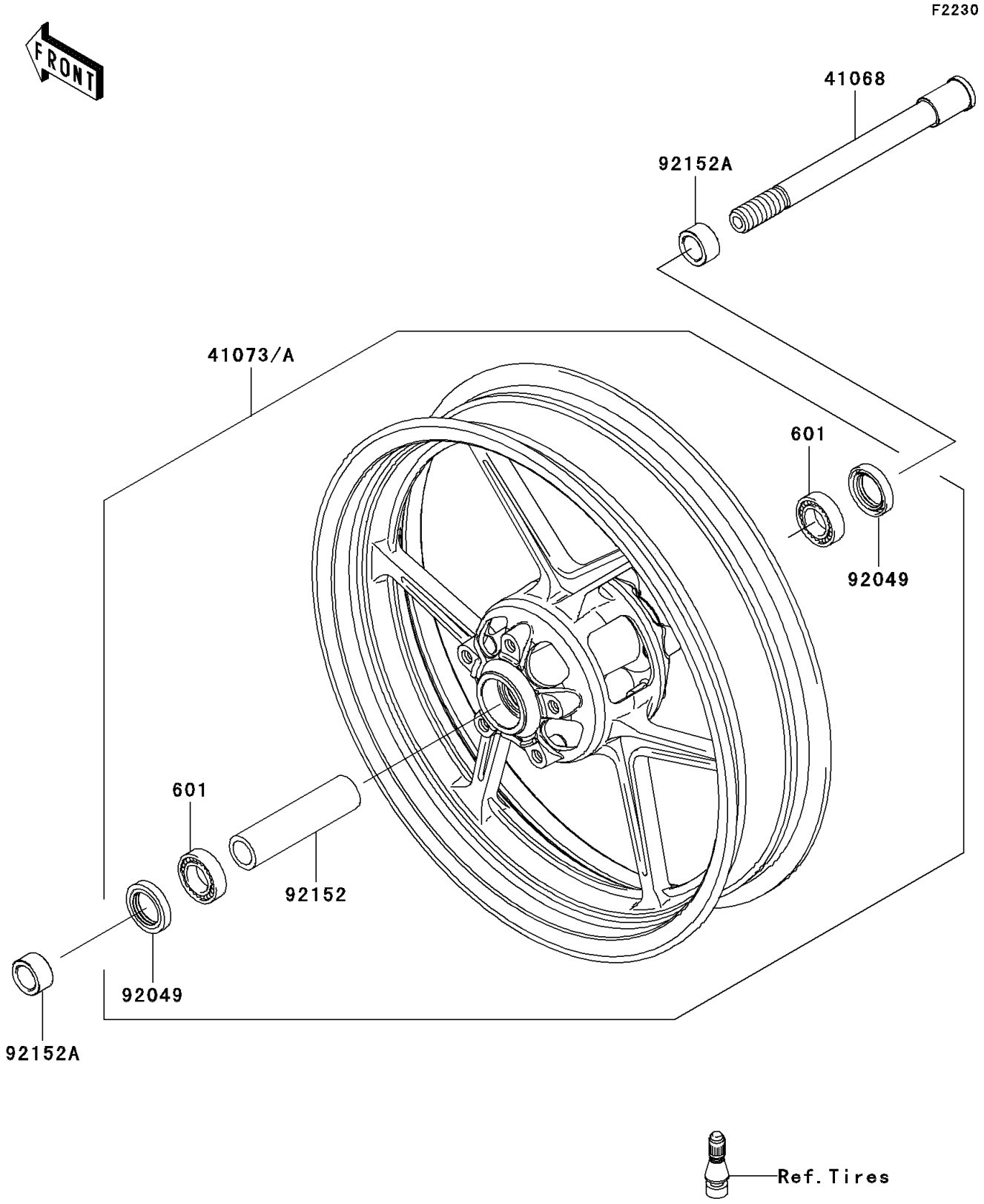

© 2025 Kawasaki Motors Corp., U.S.A.

2006 ER-6n (Australian) PARTS LIST

Front Hub

ITEM NAME	PART NUMBER	QUANTITY

© 2025 Kawasaki Motors Corp., U.S.A.