2006 ER-6n (Australian) PARTS DIAGRAM

Frame Fittings(-JKAEREA1 7A035082)

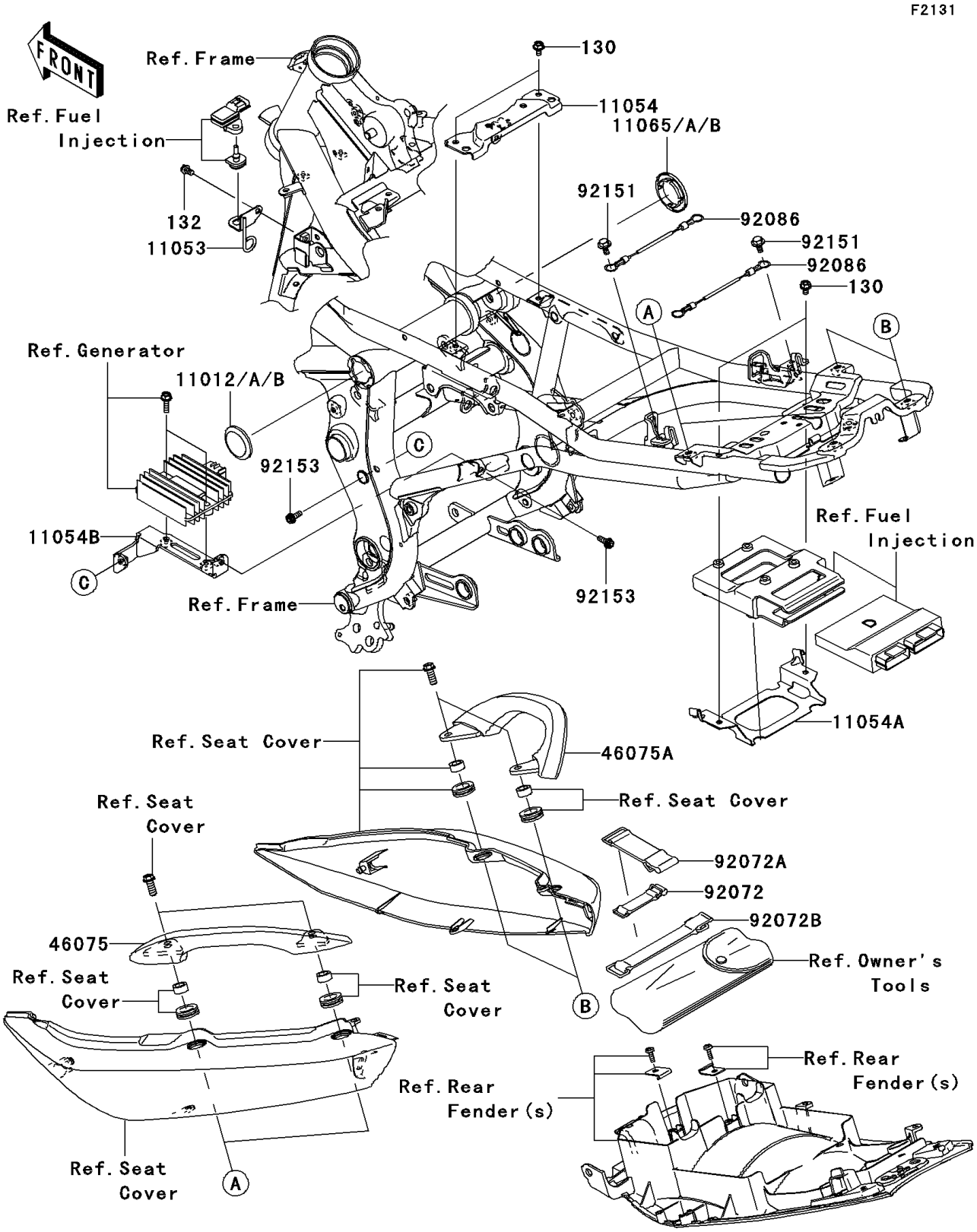

© 2025 Kawasaki Motors Corp., U.S.A.

2006 ER-6n (Australian) PARTS LIST

Frame Fittings(-JKAEREA1 7A035082)

ITEM NAME	PART NUMBER	QUANTITY
BOLT-FLANGED,6X10 (Ref # 130)	130L0610	4
BOLT-FLANGED-SMALL,6X10 (Ref # 132)	132L0610	1
CAP,CROSS PIPE,M.BRONZE (Ref # 11012)	11012-1717-10M	1
CAP,CROSS PIPE,P.RED (Ref # 11012A)	11012-1717-10N	1
BRACKET,BOOST SENSOR (Ref # 11053)	11053-1931	1
BRACKET,FUEL TANK (Ref # 11054)	11054-0248	1
BRACKET,ECU (Ref # 11054A)	11054-0347	1
BRACKET,REGULATOR (Ref # 11054B)	11054-0523	1
CAP,FRAME,M.BRONZE (Ref # 11065)	11065-0125-10M	1
CAP,FRAME,P.RED (Ref # 11065A)	11065-0125-10N	1
GRIP,LH (Ref # 46075)	46075-0033	1
GRIP,RH (Ref # 46075A)	46075-0034	1
BAND (Ref # 92072)	92072-1085	1
BAND,TOOL (Ref # 92072A)	92072-1176	1
BAND,L=150 (Ref # 92072B)	92072-1203	1
WIRE,L=150 (Ref # 92086)	92086-1075	2
BOLT,FLANGED,6X13 (Ref # 92151)	92151-1703	2
BOLT,SOCKET,6X16 (Ref # 92153)	92153-1517	2

© 2025 Kawasaki Motors Corp., U.S.A.