1991 Vulcan 500

PARTS DIAGRAM

Owner's Tools

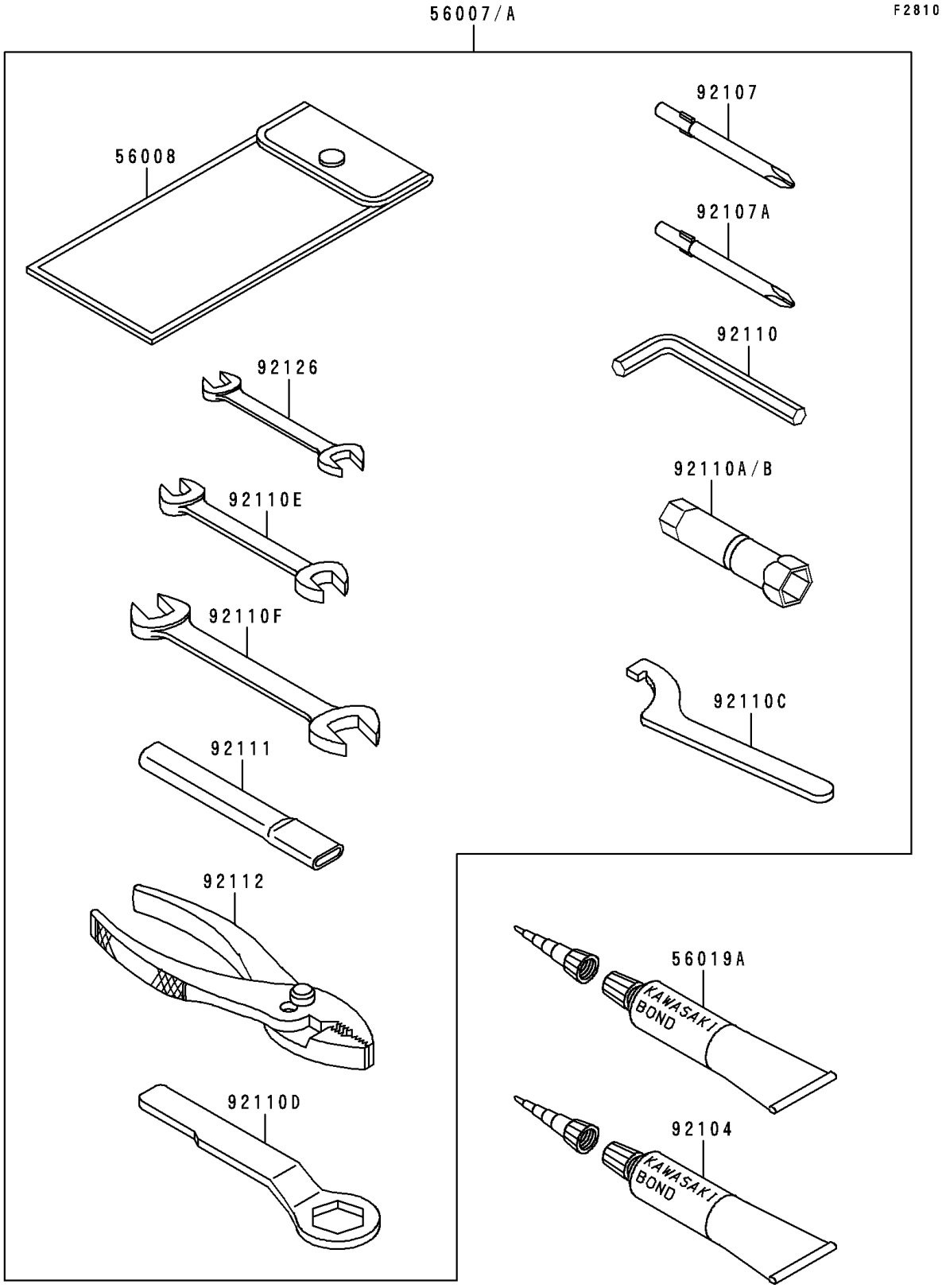

© 2026 Kawasaki Motors Corp., U.S.A.

1991 Vulcan 500

PARTS LIST

Owner's Tools

Kawasaki
Let the Good Times Roll®

ITEM NAME	PART NUMBER	QUANTITY
BAG,TOOL (Ref # 56008)	56008-1019	1
THREE BOND TB1211,HT/RS,WHITE (Ref # 56019A)	56019-120	1
GASKET-LIQUID,TUBE,100G,SILVER (Ref # 92104)	92104-002	1
TOOL-DRIVER,#3PHILLIPS (Ref # 92107)	92107-005	1
TOOL-DRIVER,#2PHILLIPS (Ref # 92107A)	92107-1053	1
TOOL-WRENCH,ALLEN,5MM (Ref # 92110)	92110-1015	1
TOOL-WRENCH,HOOK (Ref # 92110C)	92110-1129	1
TOOL-WRENCH,BOX END,27MM (Ref # 92110D)	92110-1147	1
TOOL-WRENCH,OPEN END,10X12 (Ref # 92110E)	92110-1152	1
TOOL-WRENCH,OPEN END,14X17 (Ref # 92110F)	92110-1153	1
TOOL-BAR,BOX END WRENCH (Ref # 92111)	92111-1051	1
TOOL-PLIERS (Ref # 92112)	92112-003	1
TOOL-WRENCH,OPEN END,8X10 (Ref # 92126)	92126-001	1
TOOL-KIT (Ref # 56007)	56007-1348	1
TOOL-KIT (Ref # 56007A)	56007-1350	1
TOOL-WRENCH,BOX,18MM (Ref # 92110A)	92110-1110	1
TOOL-WRENCH,BOX,18MM (Ref # 92110B)	92110-1112	1

© 2026 Kawasaki Motors Corp., U.S.A.