1991 Vulcan 500

PARTS DIAGRAM

Carburetor

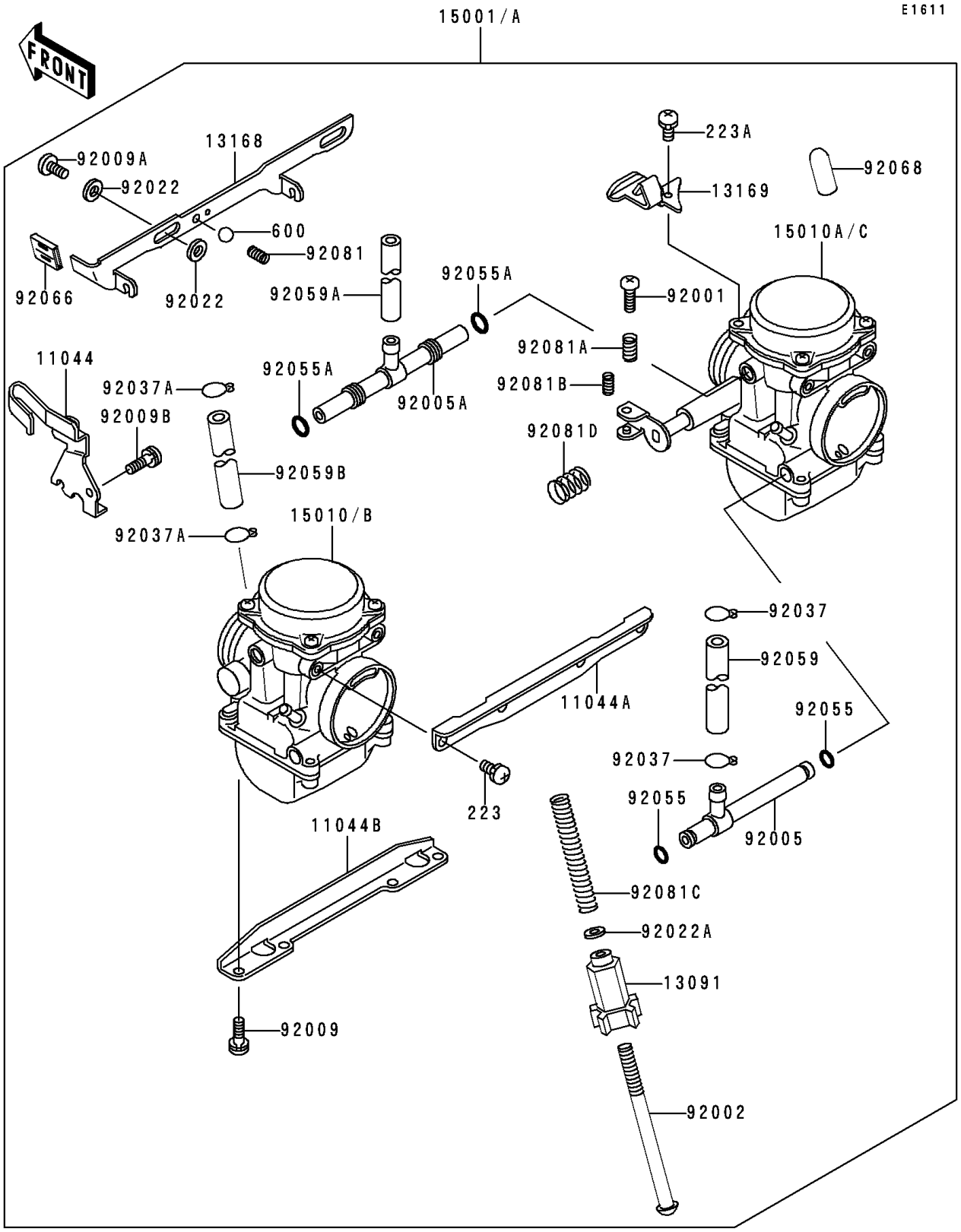

© 2026 Kawasaki Motors Corp., U.S.A.

1991 Vulcan 500

PARTS LIST

Carburetor

Kawasaki
Let the Good Times Roll®

ITEM NAME	PART NUMBER	QUANTITY
BRACKET,THROTTLE CABLE (Ref # 11044)	11044-1312	1
BRACKET,CARBURETOR STAY,UPP (Ref # 11044A)	11044-1313	1
BRACKET,CARBURETOR STAY,6MM (Ref # 11044B)	11044-1314	1
HOLDER,THROTTLE STOP SCREW (Ref # 13091)	13091-1382	1
LEVER,STARTER (Ref # 13168)	13168-1444	1
BOLT,THROTTLE ADJUST (Ref # 92001)	92001-1998	1
BOLT,THROTTLE STOP SCREW (Ref # 92002)	92002-1552	1
FITTING (Ref # 92005)	92005-1133	1
FITTING (Ref # 92005A)	92005-1134	1
SCREW,6X16 (Ref # 92009)	92009-1129	4
SCREW (Ref # 92009A)	92009-1262	2
SCREW,5X10 (Ref # 92009B)	92009-1365	1
WASHER,6.1X11X0.8,POLYACETAL (Ref # 92022)	92022-1199	4
WASHER,PLAIN,STOP SPRING (Ref # 92022A)	92022-1480	1
CLAMP,FUEL TUBE (Ref # 92037)	92037-1075	2
CLAMP,TUBE (Ref # 92037A)	92037-1477	2
RING-O (Ref # 92055)	92055-1004	2
RING-O,FUEL FITTING (Ref # 92055A)	92055-1223	2
TUBE,7.3X12.5X180 (Ref # 92059)	92059-1597	1
TUBE,6.5X9.5X260 (Ref # 92059A)	92059-1598	1
TUBE,5X9X75 (Ref # 92059B)	92059-1599	1
PLUG,STARTER LEVER (Ref # 92066)	92066-1157	1
SPRING,SHAFT STOP (Ref # 92081)	92081-1619	1
SPRING,THROTTLE ADJUST UPP (Ref # 92081A)	92081-1620	1
SPRING,THROTTLE ADJUST LWR (Ref # 92081B)	92081-1621	1
SCREW-PAN-WS-CROS (Ref # 223)	223C0510	4
BALL-STEEL,3/16" (Ref # 600)	600A0600	1
SPRING,THROTTLE STOP SCREW (Ref # 92081C)	92081-1875	1
SPRING (Ref # 92081D)	92081-1876	1

© 2026 Kawasaki Motors Corp., U.S.A.

1991 Vulcan 500

PARTS LIST

Carburetor

ITEM NAME	PART NUMBER	QUANTITY
PLATE (Ref # 13169)	13169-1955	1
CARBURETOR-ASSY (Ref # 15001)	15001-1568	1
CARBURETOR-ASSY (Ref # 15001A)	15001-1573	1
CARBURETOR,LH (Ref # 15010)	15010-1053	1
CARBURETOR,RH (Ref # 15010A)	15010-1054	1
CARBURETOR,LH (Ref # 15010B)	15010-1055	1
CARBURETOR,RH (Ref # 15010C)	15010-1056	1
PLUG,12X25 (Ref # 92068)	92068-006	1
SCREW-PAN-WS-CROS (Ref # 223A)	223D0410	1

© 2026 Kawasaki Motors Corp., U.S.A.