1993 Eliminator 250 PARTS DIAGRAM

Crankcase Bolt Pattern

E1412

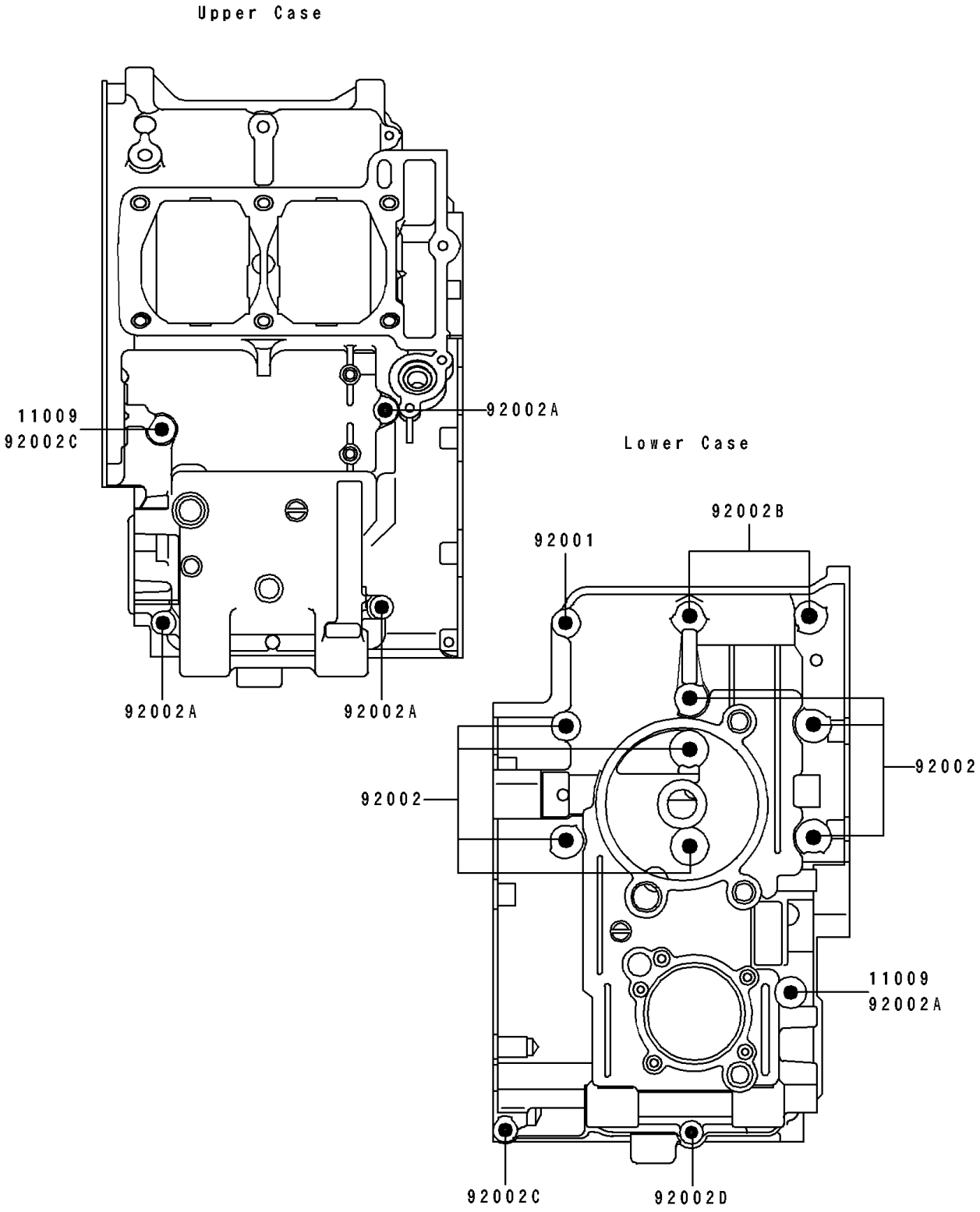

© 2024 Kawasaki Motors Corp., U.S.A.

1993 Eliminator 250 PARTS LIST

Crankcase Bolt Pattern

ITEM NAME	PART NUMBER	QUANTITY
GASKET,6.5X12X1.0 (Ref # 11009)	11009-1568	2
BOLT,6X38 (Ref # 92001)	92001-1899	1
BOLT,8X90 (Ref # 92002)	92002-1057	7
BOLT,6X85 (Ref # 92002A)	92002-1306	4
BOLT,8X72 (Ref # 92002B)	92002-1329	2
BOLT,6X60 (Ref # 92002C)	92002-1584	2
BOLT,6X135 (Ref # 92002D)	92002-1687	1

© 2024 Kawasaki Motors Corp., U.S.A.