2012 EDGE R PARTS DIAGRAM

Stand(s)

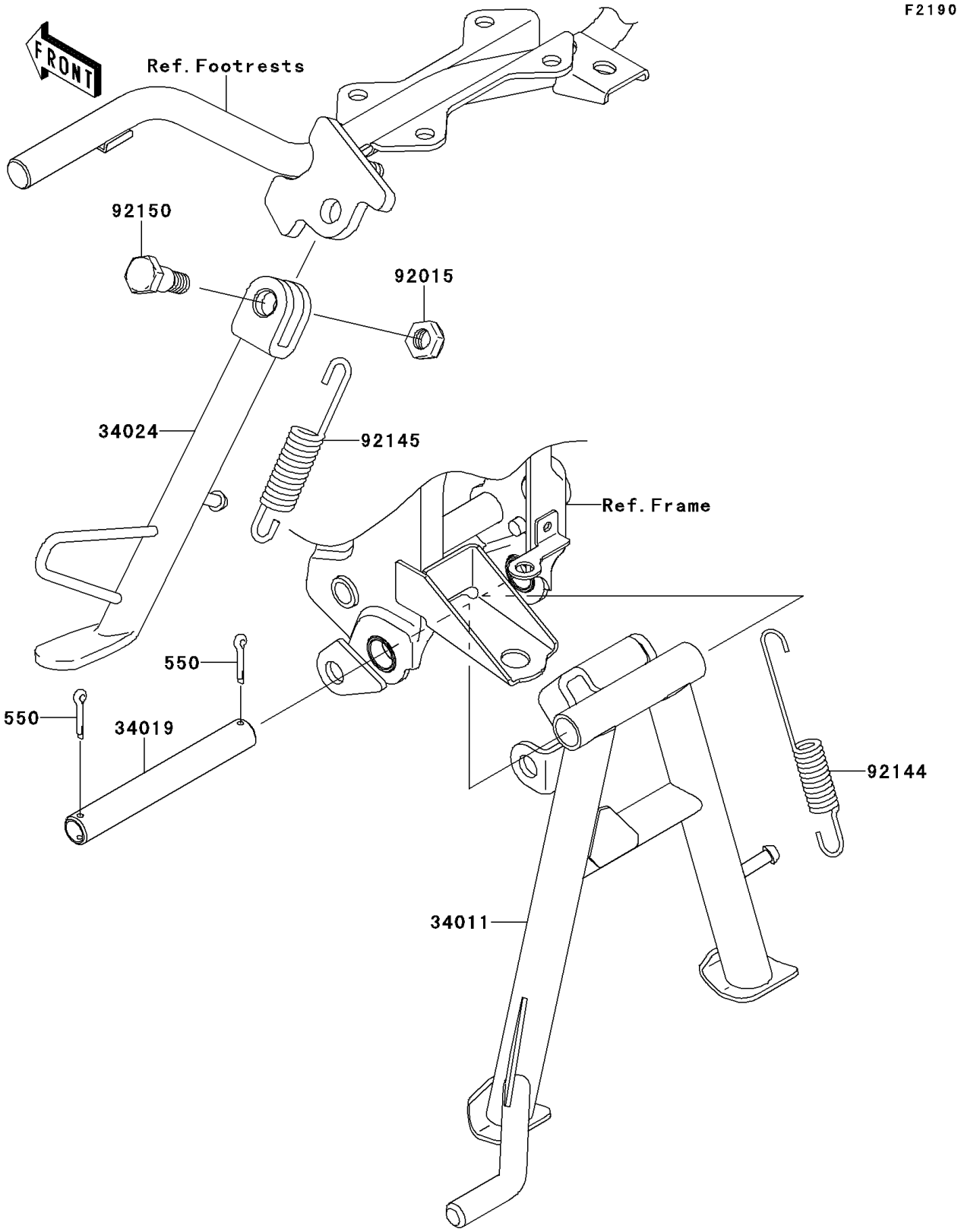

© 2026 Kawasaki Motors Corp., U.S.A.

2012 EDGE R PARTS LIST

Stand(s)

ITEM NAME	PART NUMBER	QUANTITY
PIN-COTTER,3.0X30 (Ref # 550)	550AA3030	2
STAND-CENTER (Ref # 34011)	34011-0059	1
SHAFT-STAND,CENTER (Ref # 34019)	34019-0002	1
STAND-SIDE (Ref # 34024)	34024-0104	1
NUT,LOCK,10MM (Ref # 92015)	92015-1962	1
SPRING,CENTER STAND (Ref # 92144)	92144-1385	1
SPRING,STAND (Ref # 92145)	92145-0106	1
BOLT,SIDE STAND (Ref # 92150)	92150-1545	1

© 2026 Kawasaki Motors Corp., U.S.A.