2011 AN112 PARTS DIAGRAM

Cables

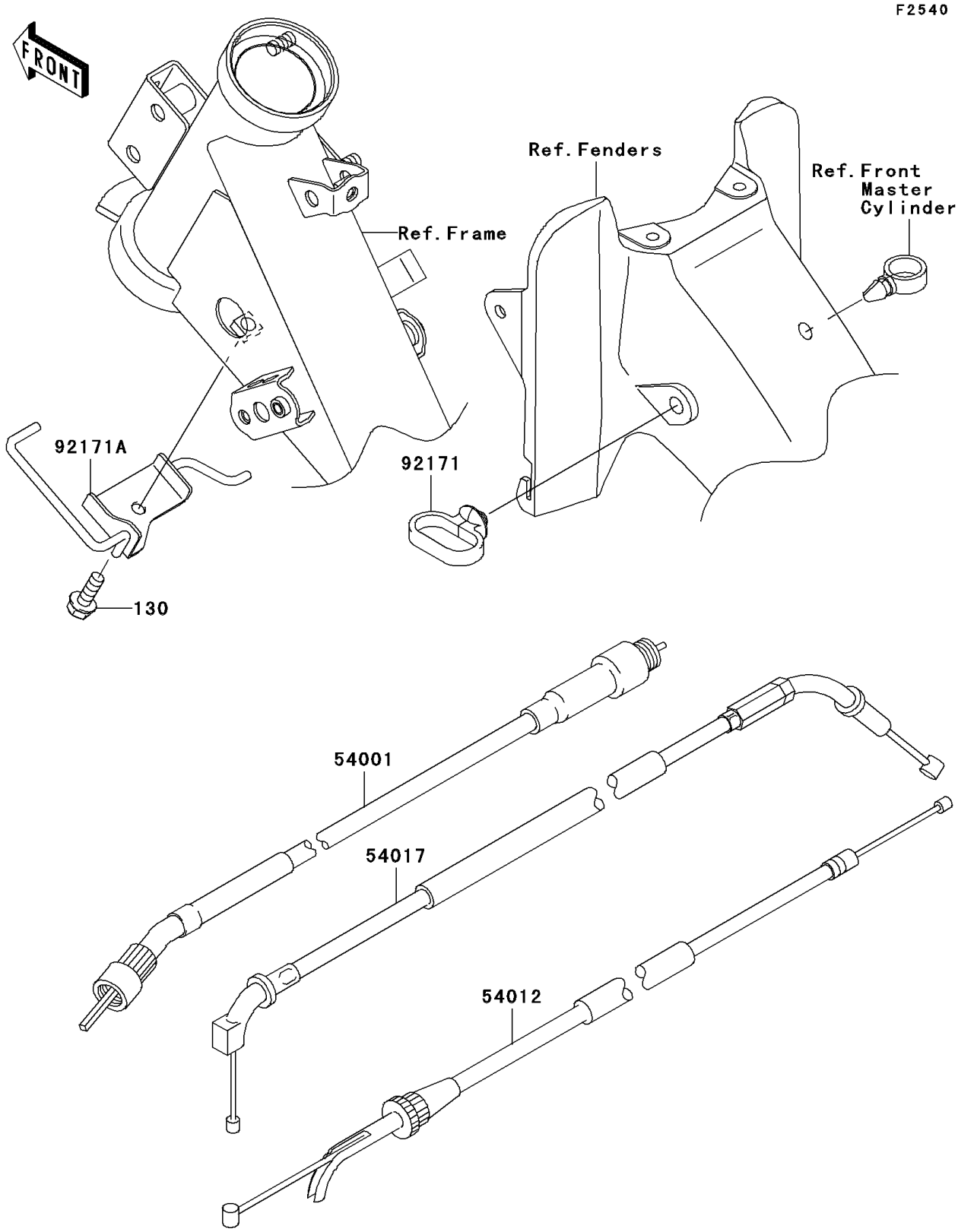

© 2024 Kawasaki Motors Corp., U.S.A.

2011 AN112 PARTS LIST

Cables

ITEM NAME	PART NUMBER	QUANTITY
BOLT-FLANGED,6X16 (Ref # 130)	130BB0616	1
CABLE-SPEEDMETER (Ref # 54001)	54001-0005	1
CABLE-THROTTLE (Ref # 54012)	54012-0137	1
CABLE-STARTER (Ref # 54017)	54017-0018	1
CLAMP,CABLE (Ref # 92171)	92171-0022	1
CLAMP,CABLE (Ref # 92171A)	92171-0224	1

© 2024 Kawasaki Motors Corp., U.S.A.