2011 AN112 PARTS DIAGRAM

Camshaft(s)/Tensioner

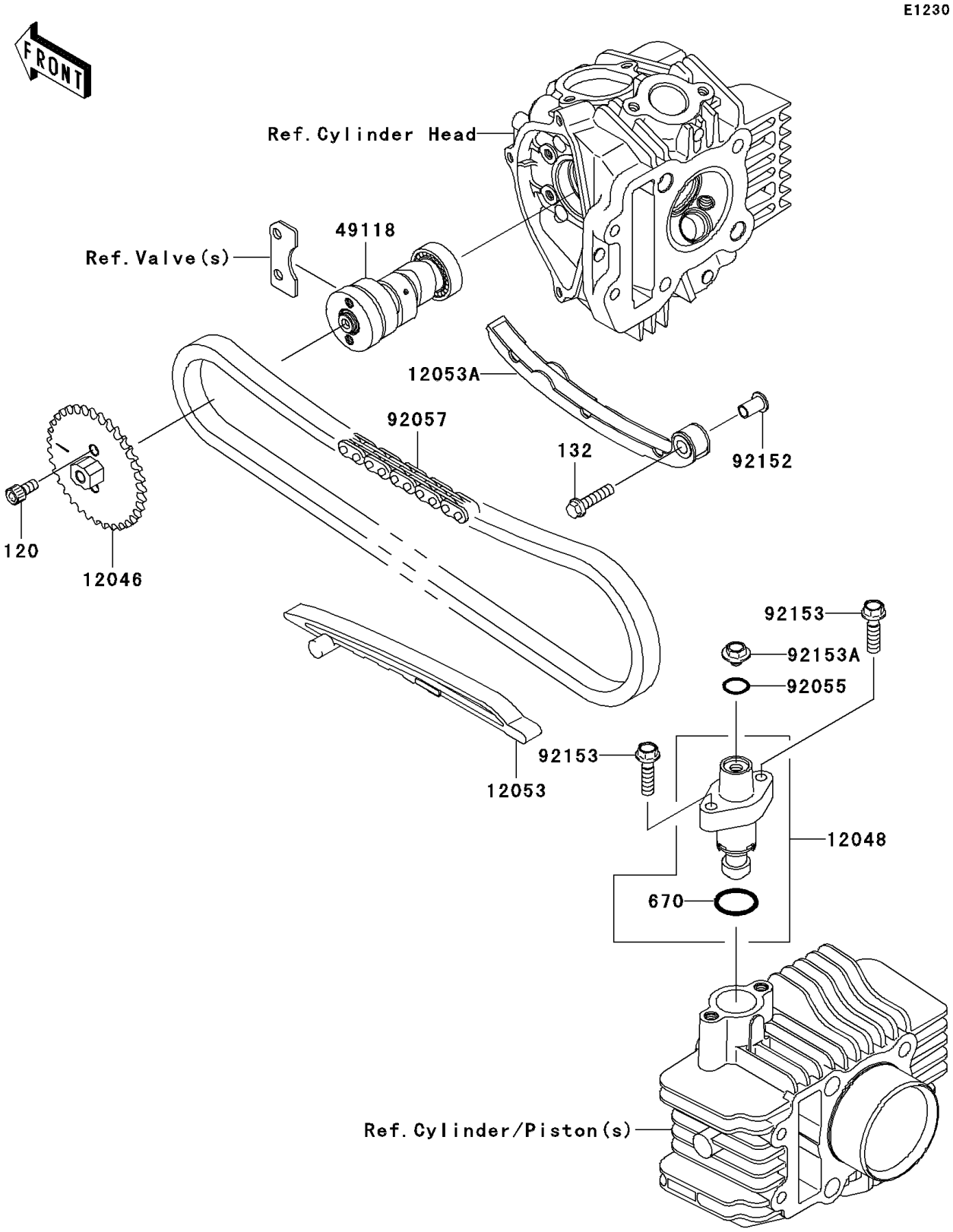

© 2024 Kawasaki Motors Corp., U.S.A.

2011 AN112 PARTS LIST

Camshaft(s)/Tensioner

ITEM NAME	PART NUMBER	QUANTITY
BOLT-SOCKET,6X12 (Ref # 120)	120CA0612	2
BOLT-FLANGED-SMALL,6X25 (Ref # 132)	132BA0625	1
O RING,21MM (Ref # 670)	670D2021	1
SPROCKET,CAM CHAIN,36T (Ref # 12046)	12046-1206	1
TENSIONER-ASSY (Ref # 12048)	12048-1164	1
GUIDE-CHAIN (Ref # 12053)	12053-0155	1
GUIDE-CHAIN,LOOSE (Ref # 12053A)	12053-1397	1
CAMSHAFT-COMP (Ref # 49118)	49118-0057	1
RING-O,9.8X2.4 (Ref # 92055)	92055-0060	1
CHAIN,CAM (Ref # 92057)	92057-0032	1
COLLAR,CHAIN GUIDE (Ref # 92152)	92152-1369	1
BOLT,6X25 (Ref # 92153)	92153-1185	2
BOLT,TENSIONER (Ref # 92153A)	92153-1945	1

© 2024 Kawasaki Motors Corp., U.S.A.